GTHZ Series

Curved arm high-altitude work platform

GTHZ120
GTHZ170
GTHZ170C

Repair manual

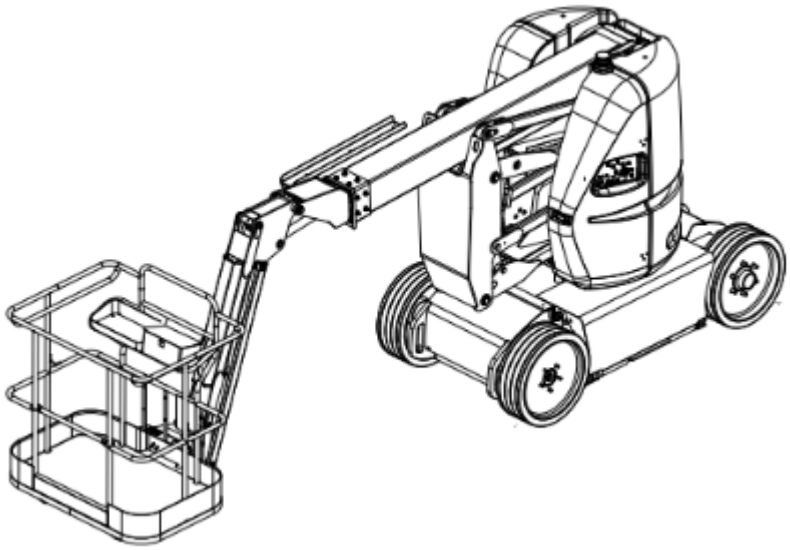

HANGCHA GROUP CO., LTD

Jan. 2024

Catalogue

Preface 1
Chapter 1 Product Performance Parameters 2
1.1 Product Performance Parameters 2
1.2 Operation Scope Diagram 4
1.3 Action Time 7
1. 4 Test Requirements 7
1. 5 Dynamic Parameters 8
1.6 Installation Instructions for Hydraulic Hose and Pipe Joint 8
1.6.1 Hydraulic Hose Torque 8
1.6.2 Hydraulic Pipe Joint Torque 9
1.6.3 Tightening Procedure of Hydraulic Hose and Pipe Joint 11
1. 6. 4 Tightening Torque of Fasteners 12
Chapter 2 Important Safety Rules 14
2.1 Summary 14
2.2 Symbol Description 14
2.3 Accident Notification 15
2.4 Electric Shock Hazard 15
2.5 Tip-over Hazard 16
2.6 Working Environment Hazard 17
2. 7 Unsafe Operation Hazard 19
2.8 Fall Hazard 20
2.9 Collision Hazard 20
2.10 Crushing Hazard 21
2.11 Explosion and Fire Hazard 21
2.12 Damaged Machine Hazard 21
2.13 Bodily Injury Hazard 22
2.14 Battery Hazard 22
2.15 Hydraulic System Hazard 23
2.16 Weldment and Grinding Safety 23
2.17 Lockout after Each Use 24
Chapter 3 Working Principle and Each System 25
3.1 Energy 25
3.2 Hydraulic System 25
3.3 Electrical System 25
3.4 Machine Control 25
3.5 Safety Measures 25
Chapter 4 Maintenance and Repair Guide 26
4.1 Summary 26
4.2 Preparation, Inspection and Maintenance 26
4.3 Hangcha Approved Equipment Engineer 26
4.4 Pre Operation Inspection 26
4.5 Pre Delivery Inspection and Daily Inspection 26
4.6 Annual Inspection of Machine 27
4.7 Preventive Maintenance 27
4.8 Precautions for Maintenance and Repair 29

4.8.1 Summary 29
4.8.2 Safety and Operation Standards 29
4.8.3 Clean 29
4.8.4 Component Removal and Installation 29
4.8.5 Component Disassembly and Reassembly 29
4.8.6 Pressed Parts 30
4.8.7 Bearing 30
4.8.8 Washer 30
4.8.9 Bolt Usage and Torque Application 30
4.8.10 Hydraulic Pipeline and Electrical Wiring 30
4.8.11 Hydraulic System 31
4.8.12 Lubrication 31
4.8.13 Battery 31
4.9 Pin Shaft and Composite Bearing 31
4.10 Use Insulating Silicone Grease at the Electrical Connection Position 32
Chapter 5 Maintenance 33
5.1 Pre Delivery Inspection 34
5.2 Maintenance Schedule 35
5.3 Maintenance Inspection Report 35
5.3.1 Inspection Procedure A 38
5.3.2 Inspection Procedure B 51
5.3.3 Inspection procedure C 64
Chapter 6 Maintenance procedures 69
6.1 Disassembly and Installation of Components 69
6.1.1 Tires and rims 69
6.1.2 Walking Reducer and Motor 71
6.1.3 Battery 73
6.2 Hydraulic System 74
6.2.1 Hydraulic Schematic Diagram 74
6.2.2 Hydraulic Component Location Diagram 76
6.2.3 Debug Pressure 78
6.3 Electrical System 82
6.3.1 Electrical Schematic Diagram 82
6.3.2Fault Code Description 84
6.4 Use and Maintenance of Lead-acid Battery (maintenance required) 89
6.4.1 Required Equipment 89
6.4.2 Safety Instructions for Battery Installation 89
6.4.3 Battery Connection Instructions 90
6.4.4 Preventive Maintenance 90
6.4.5 Charge 91
6.4.6 Equilibrium 92
6.4.7 Storage 92
6.4.8 Troubleshooting 92
6.5 Use and Maintenance of Lithium Battery 94
Chapter 7 Inspection and Maintenance Record Form 96

Preface

Thank you for purchasing the machine from Hangcha Group. Before using the machine, you should master the use and operation requirements of the machine! Any operation of the machine is risky. Only by mastering the safety rules and carefully operating can we effectively prevent personal injury, property damage and accidents. Your safety needs our joint efforts!

The machine is limited to transporting people and tools to the working position and carrying out operations on the working platform. Human safety is closely related to the operation and use of the machine. It is very important to train competent and careful personnel to use the machine and carry out safe operation of the machine. Only trained and authorized personnel are allowed to operate the machine.

This manual is used to guide users/operators to operate and use the machine. It is the responsibility of the user/operator to read, understand and follow this manual and manufacturer's instructions before operating and using the machine. Operators should read, understand and comply with the safety rules and operation instructions, consider the operating parameters and expected environment of the equipment, and strictly comply with the requirements for safe use.

This manual, together with the *Operation Manual* and the *Parts Manual*, should be taken as a part of the machine and kept with the machine at all times! And the manager of the machine shall ensure that all necessary information about operation and routine inspection/maintenance is provided to each lessee by the machine manufacturer. If the sale shall be distributed randomly, the machine manager shall also provide the manufacturer's maintenance information to the trained maintenance personnel responsible for the machine.

Our product design will be constantly updated and improved, the content of this manual may be different from the equipment in your hand.

In case of any ambiguity, please contact the sales company or agent of Hangcha Group Co., Ltd.

Chapter 1 Product Performance Parameters

1.1 Product Performance Parameters

Table 1-1 product performance parameters

Dimension parameters			
	GTHZ120	GTHZ170	GTHZ170C
Maximum platform height	9.95m	14.75m	14.95m
Maximum working height	11.95m	16.75m	16.95m
Maximum crossing height	4.77m	7.16m	7.30m
Maximum horizontal extension	6.5m	8.93m	8.93m
Maximum horizontal working distance	7.0m	9.3m	9.3m
Length	5.48m	6.84m	6.90m
Length（Transportation status）	3.74m	5.40m	5.46m
Width	1.20m	1.75m	1.75m
Height	2.01m	2.11m	2.15m
Height（Transportation status）	2.18m	2.11m	2.15m
Wheelbase	1.65m	2.0m	2.0m
Maximum ground clearance	0.10m	0.14m	0.2m
Platform width (length × width × height)	1.20m×0.77m	1.20m×0.77m	1.80m×0.77m
Tire model	0.60m×0.19m	0.60m×0.19m	0.73m×0.225m
Performance parameter			
Rated load	200kg	200kg	230kg
Maximum number of operators	2 person	2 person	2 person
Maximum manual force	400N	400N	400N
Maximum driving speed (retracted state)	6km/h	6km/h	6km/h
Maximum driving speed (lifting state)	0.6km/h	0.6km/h	0.6km/h
Turn radius (inner)	1.55m	2.0m	2.0m
Turn radius (outer)	3.25m	4.3m	4.3m
Gradeability	25%	25%	25%
Maximum chassis tilt angle	3°	3°	3°
Body rotation	350°	355°	355°
Turntable tailswing	0	0.235m	0.235m
Maximum allowable wind speed	12.5m/s	12.5m/s	12.5m/s
Platform rotation angle	140°	140°	140°
Jib luffing angle	70°/-70°	70°/-70°	70°/-70°

Power parameters			
Drive mode (drive × Steering)	2WD×2WS	2WD×2WS	2WD×2WS
Drive motor	7. 6kW	7. 6kW	7. 6kW
Pump Motor	5. 1kW	5. 1kW	5. 1kW
Pump	6ml/r	6ml/r	6ml/r
Oil Tank Capacity	14L	14L	14L
Hydraulic system pressure	21MPa	21MPa	21MPa
Battery specification (voltage, capacity)	80V/210Ah	80V/210Ah	80V/210Ah
System voltage	80V	80V	80V
Control voltage	24V	24V	24V
Weight			
Total weight	6670kg	6990kg	7130kg
Ground bearing information			
Maximum tire load	4200kg		
Noise			
Noise	≤80dB		

Note:

a. Calculated according to the height of personnel equal to 2m, the working height is equal to the height of working platform plus 2m.

b. The ground bearing information is myopia information, and different selection configuration factors are not included. Use this information only if you have a sufficiently high safety factor.

c. Add hydraulic oil and lubricating oil suitable for the environment according to the ambient temperature in different regions.

1.2 Operation Scope Diagram

Table 1-2 Operation scope diagram

GTHZ120

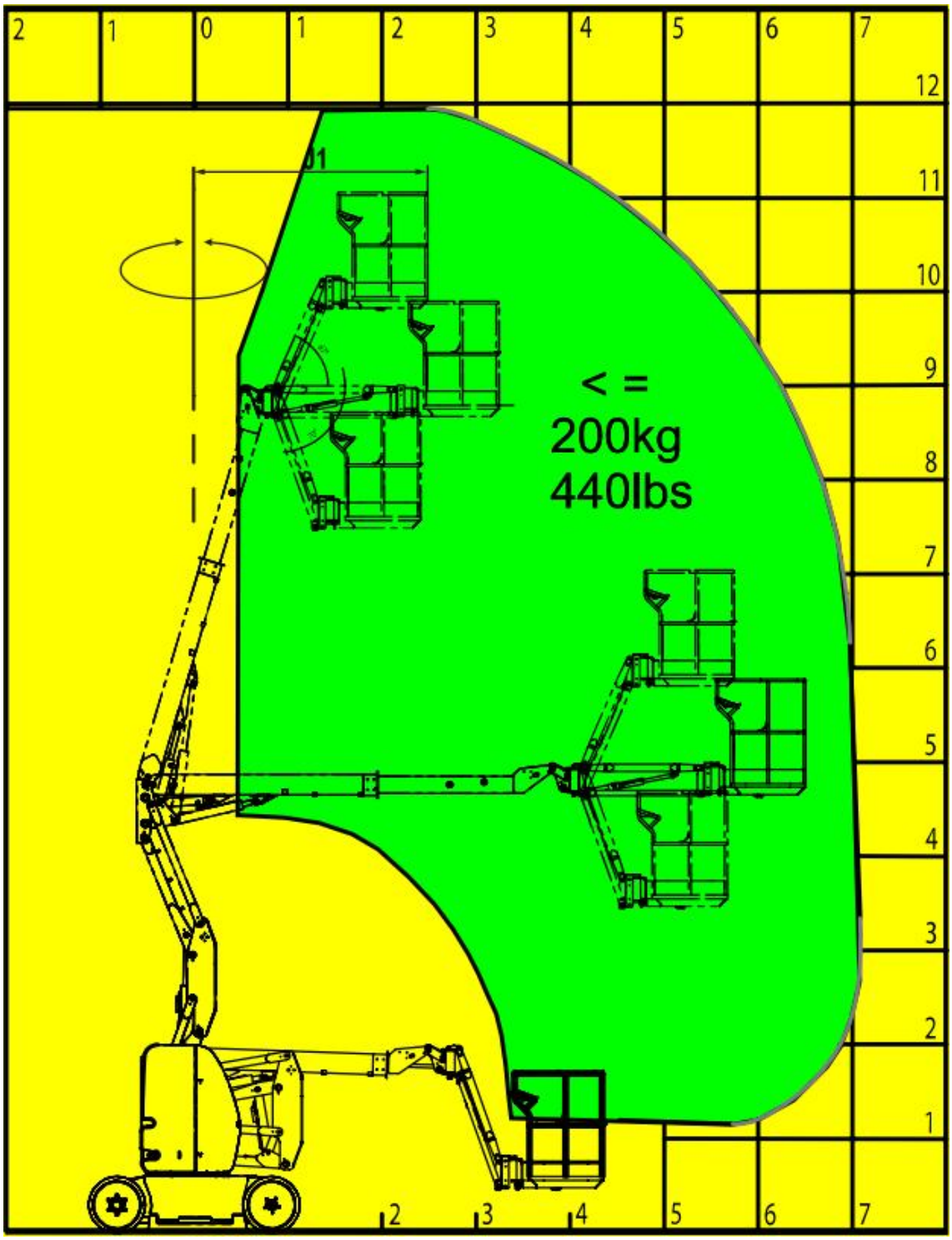

GTHZ170

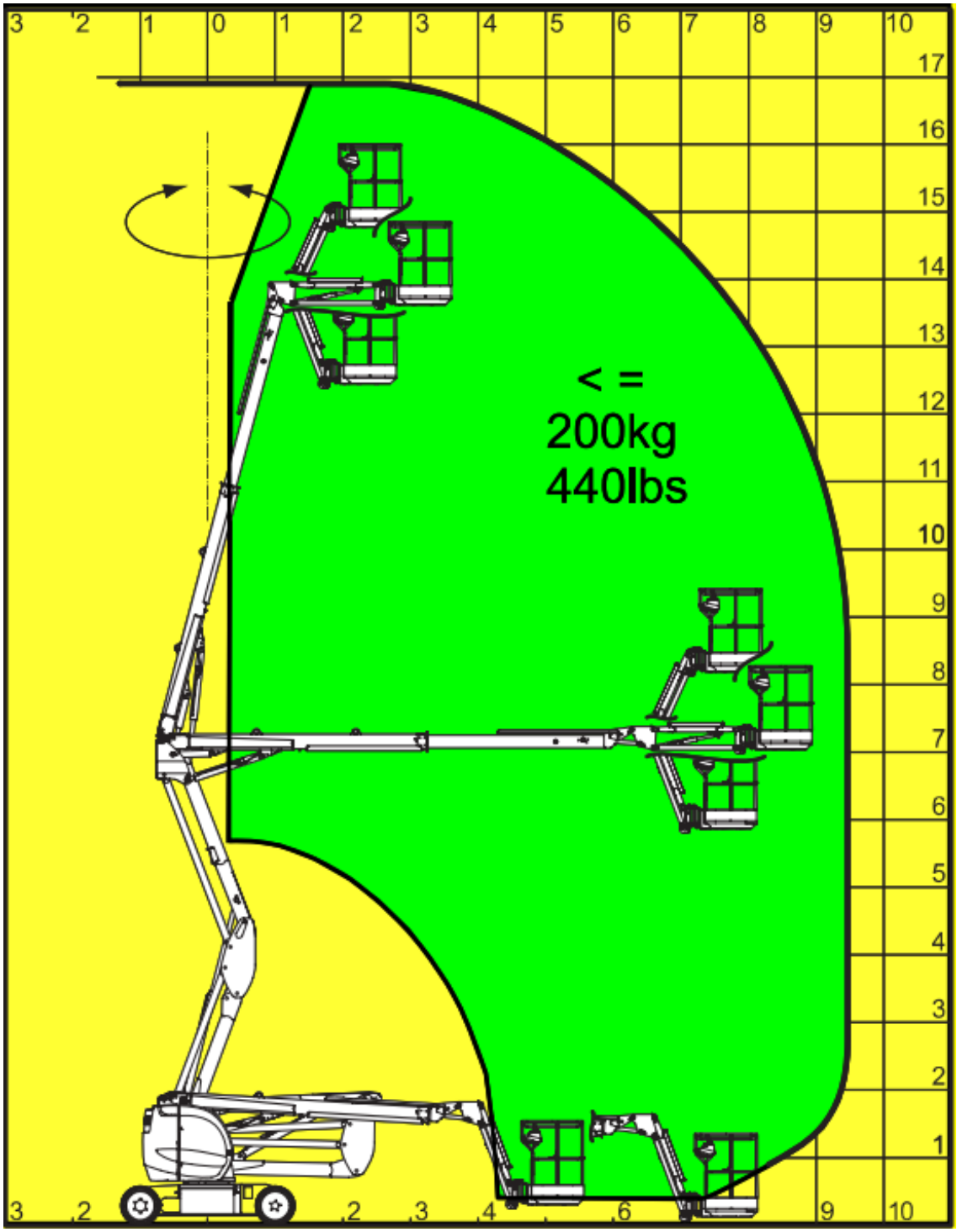

GTHZ170C

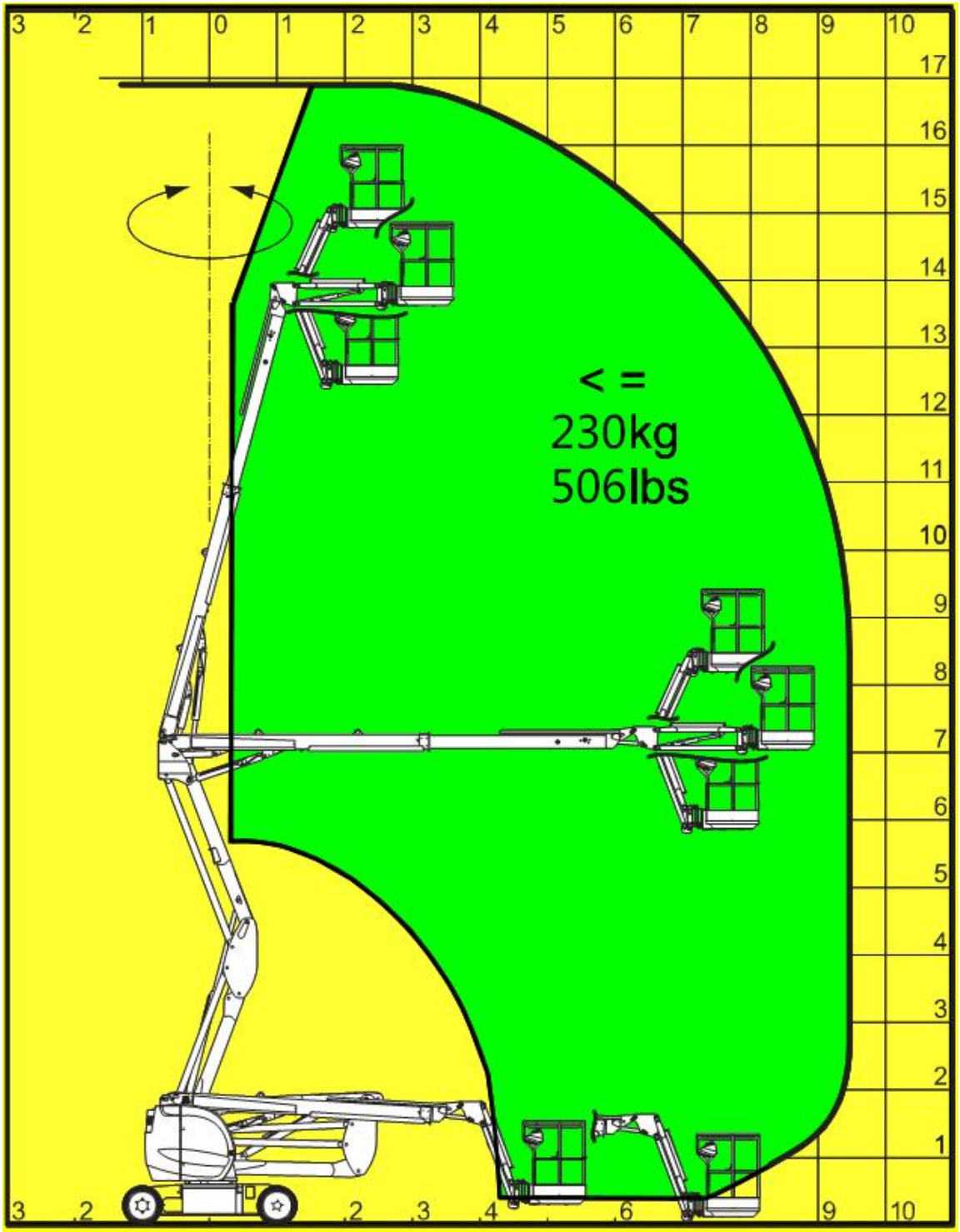

1.3 Action Time

Table 1-3 Operating speed

Parameter item		GTHZ120	GTHZ170	GTHZ170C
Lower arm luffing upper	s	16~18	38~42	38~42
Lower arm luffing lower	s	24~26	25~27	25~27
Upper luffing arm upper	s	25~27	35~37	35~37
Upper luffing arm lower	s	23~25	35~37	35~37
Turntable rotation（1/4）	s	19~21	27~29	27~29
Telescopic arm extension	s	14~16	20~22	20~22
Telescopic boom retraction	s	12~14	17~19	17~19
Platform rotation（140°）	s	7~9	7~9	7~9
Boom up	s	16~18	16~18	16~18
Boom lower	s	16~18	17~19	17~19

a. The start and end depends on the action, not on the controller or switch.
b. Walking test results vary with tire specifications.
c. All speed tests shall be conducted on the platform control box, and there will be differences in the operation of the ground control box.
d. All tests shall be carried out when the hydraulic oil temperature is higher than 40 ℃ . If the hydraulic oil temperature is too low, the test results will be affected.

1. 4 Test Requirements

- **Lower arm luffing：** the upper arm luffing is in place, and the telescopic arm is fully retracted. Lower arm luffing up action (from the lowest point to the maximum angle) twice, luffing down action (from the maximum angle to the lowest point) twice.
- **Upper arm luffing：** the upper arm luffing moves up twice and down twice.
- **Turntable rotation：** the boom is located in the center, turn left or right for a quarter of a turn and test twice.
- **Telescopic：** the lower arm is horizontal, extending from full retraction to full extension twice, and retracting from full extension to position twice.
- **Platform rotation：** when the working platform is horizontal, the platform rotates from the leftmost to the rightmost twice, and from the rightmost to the leftmost twice.
- **Boom up and down：** start from the lowest end of the boom. The boom rises twice and drops twice.
- **Walking：** the test should be performed on a horizontal surface. Switch to the high-speed state and push the walking handle to the maximum travel. Drive 30 meters forward twice and 30 meters backward twice.

1. 5 Dynamic Parameters

Table 1-4 Dynamic parameters

Parameter	Specifications
Hydraulic oil	
Normal temperature area（0℃~40℃）	L-HM46
Cold area（-25℃~25℃）	L-HV32
High temperature area（＞40℃）	L-HM68
Extremely cold area（＜-30℃）	Special customization required
Hydraulic pump	
Type	Gear pump
Flow	8ml/r
Rated working pressure	21MPa
Function valve	
Maximum working pressure of main valve	21MPa

1.6 Installation Instructions for Hydraulic Hose and Pipe Joint

1.6.1 Hydraulic Hose Torque

When removing or installing the hydraulic hose, it must be removed or installed according to the torque specified in the table below.

NOTE
When the machine leaves the factory, the manufacturer can fill different hydraulic oils according to customer's requirements. Different hydraulic oils cannot be mixed.

Table 1-5 torque of hydraulic hose

Metric thread	L	S
M12×1.5	19± 1 Nm	
M14×1.5	26± 2 Nm	
M16×1.5	40± 3 Nm	
M18×1.5	50± 4 Nm	
M20×1.5	-	60± 4 Nm
M22×1.5	70± 5 Nm	-
M24×1.5	-	85± 6 Nm
M26×1.5	90± 6 Nm	-
M30×2	120± 8Nm	140± 10Nm
M36×2	150± 12Nm	180± 12Nm
M42×2	-	260± 16Nm
M45×2	240± 15Nm	-

1.6.2 Hydraulic Pipe Joint Torque

When removing or installing the hydraulic pipe joint metric thread, it must be removed or installed according to the torque specified in the table below.

Table 1-6 Hydraulic pipe joint torque - Metric

Thread specification	Al	Steel	
	ED+O Ring	ED+O Ring	O Ring
L			
M10×1	18 ± 1 Nm	20 ± 2 Nm	18 ± 1 Nm
M12×1.5	30 ± 2 Nm	35 ± 2 Nm	30 ± 2 Nm
M14×1.5	42 ± 3 Nm	48 ± 4 Nm	35 ± 2 Nm
M16×1.5	55 ± 4 Nm	60 ± 4 Nm	40 ± 3 Nm
M18×1.5	75 ± 5 Nm	75 ± 5 Nm	45 ± 3 Nm
M22×1.5	90 ± 6 Nm	130 ± 8 Nm	60 ± 4 Nm
M27×2	120 ± 8 Nm	185 ± 12 Nm	100 ± 7 Nm
M30×2	140 ± 8 Nm	245 ± 15 Nm	135 ± 8 Nm
M33×2	180 ± 10 Nm	320 ± 20 Nm	160 ± 10 Nm
M42×2	240 ± 15 Nm	450 ± 25 Nm	210 ± 13 Nm
M48×2	280 ± 20 Nm	540 ± 30 Nm	260 ± 15 Nm
S			
M12×1.5	33 ± 2 Nm	43 ± 3 Nm	35 ± 2 Nm
M14×1.5	42 ± 3 Nm	50 ± 4 Nm	45 ± 3 Nm
M16×1.5	55 ± 4 Nm	75 ± 5 Nm	55 ± 4 Nm
M18×1.5	75 ± 5 Nm	95 ± 6 Nm	70 ± 5 Nm
M22×1.5	90 ± 6 Nm	140 ±8Nm	100 ± 10 Nm
M27×2	120 ± 8 Nm	185 ±12Nm	160 ± 10 Nm
M30×2	140 ± 8 Nm	245 ±15Nm	210 ± 13 Nm
M33×2	180 ± 10 Nm	320 ± 20 Nm	260 ± 15 Nm
M42×2	240 ± 15 Nm	450 ± 25 Nm	330 ± 20 Nm
M48×2	280 ± 20 Nm	540 ± 30 Nm	420 ± 25 Nm

When removing or installing the hydraulic pipe joint - Inch BSP thread, it must be removed or installed according to the torque specified in the table below.

Table 1-7 Hydraulic pipe joint torque - British system (BSP)

Thread specification	AI	Steel	
	ED+O Ring	ED+O Ring	O Ring
L			
G1/8A	20 ± 1 Nm	20 ± 1 Nm	-
G1/4A	35 ± 2 Nm	40 ± 2 Nm	-
G3/8A	50 ± 3 Nm	75 ± 5 Nm	-
G1/2A	75 ± 5 Nm	95 ± 6 Nm	-
G3/4A	120 ± 8 Nm	185 ± 12 Nm	-
G1A	180 ± 10 Nm	320 ± 20 Nm	-
G1-1/4A	240 ± 15 Nm	450 ± 25 Nm	-
G1-1/2A	280 ± 20 Nm	540 ± 30 Nm	-
S			
G1/4A	40 ± 3 Nm	43 ± 3 Nm	-
G3/8A	55 ± 3 Nm	85 ± 5 Nm	-
G1/2A	80 ± 5 Nm	120 ± 8 Nm	-
G3/4A	120 ± 8 Nm	185 ± 12 Nm	-
G1A	180 ± 10 Nm	320 ± 20 Nm	-
G1-1/4A	240 ± 15 Nm	450 ± 25 Nm	-
G1-1/2A	280 ± 20 Nm	540 ± 30 Nm	-

When removing or installing the hydraulic pipe joint - American UNC / UNF thread, it must be removed or installed according to the torque specified in the following table.

Table 1-8 Hydraulic pipe joint torque - American system (UNC / UNF)

Thread specification	Al	Steel
	O Ring	O Ring
L		
7/16-20	21± 2 Nm	21± 2 Nm
9/16-18	34± 2 Nm	35± 2 Nm
11/16-12	40± 3 Nm	50± 4 Nm
3/4-16	50± 3 Nm	65± 4 Nm
7/8-14	75± 5 Nm	110± 8 Nm
1-1/16-12	110 ± 8 Nm	140 ± 10 Nm
1-5/16-12	160 ± 10 Nm	210 ± 15 Nm
S		
7/16-20	21± 2 Nm	23± 2 Nm
9/16-18	34± 2 Nm	40± 3 Nm
11/16-12	40± 3 Nm	65± 4 Nm
3/4-16	50± 3 Nm	80± 6 Nm
7/8-14	75± 5 Nm	125±10Nm
1-1/16-12	110± 8 Nm	185±15Nm
1-5/16-12	160± 10Nm	280±20Nm

1.6.3 Tightening Procedure of Hydraulic Hose and Pipe Joint

When installing hydraulic hose and pipe joint, it must be installed according to the following requirements.

1. Replace the O-ring when the seal is damaged or there is oil leakage at the seal. Once the tightening torque of the pipe joint or rubber hose exceeds the specified tightening torque value, the O-ring cannot be reused.
2. Lubricate the O-ring before installation.
3. Install the O-ring correctly.
4. When butting the rubber hose nut and pipe joint, align the pipe joint, rubber hose and rubber hose nut, and tighten the nut according to the torque requirements.
5. Tighten the nut or pipe joint according to the torque provided in the table above.
6. Perform all functions of the machine and check the rubber hose, pipe joint and related parts to ensure there is no leakage.

1. 6. 4 Tightening Torque of Fasteners

Unless there are special torque requirements in the manual or other instructions, the general tightening torque of metric bolts shall be implemented according to the following table.

Table 1-9 Tightening torque of fasteners - Metric

Diameter (mm)	Pitch (mm)	8.8 Grade	10.9Grade	12.9Grade
5	0.8	7 Nm	9 Nm	10 Nm
6	1	12 Nm	15 Nm	18 Nm
8	1.25	30 Nm	35 Nm	42 Nm
	1	30 Nm	37 Nm	45 Nm
10	1.5	55 Nm	75 Nm	85 Nm
	1.25	56 Nm	77 Nm	87 Nm
	1	60 Nm	80 Nm	92 Nm
12	1.75	95 Nm	125 Nm	150 Nm
	1.5	100 Nm	130 Nm	155 Nm
	1.25	105 Nm	135 Nm	160 Nm
14	2	150 Nm	200 Nm	230 Nm
	1.5	165 Nm	210 Nm	250 Nm
16	2	230 Nm	300 Nm	360 Nm
	1.5	250 Nm	320 Nm	380 Nm
18	2.5	320 Nm	420 Nm	500 Nm
	1.5	360 Nm	470 Nm	550 Nm
20	2.5	450 Nm	600 Nm	700 Nm
	1.5	500 Nm	650 Nm	770 Nm
22	2.5	600 Nm	800 Nm	980 Nm
	2	650 Nm	850 Nm	1050 Nm
24	3	750 Nm	1050 Nm	1250 Nm
	2	800 Nm	1100 Nm	1300 Nm
27	3	1150 Nm	1500 Nm	1800 Nm
30	3.5	1500 Nm	2000 Nm	2400 Nm

Unless there are special torque requirements in the manual or other instructions, the tightening torque of general American bolts (thread mark: UNC) shall be implemented according to the following table.

Table 1-10 Tightening torque of fasteners - American (UNC)

Diameter（in）	Opposite dimension of nut（s）	American grade 5	American grade 8
1/4-20	7/16"	10Nm	14Nm
5/16-18	1/2"	21Nm	29Nm
3/8-16	9/16"	37Nm	51Nm
7/16-14	5/8"	60Nm	82Nm
1/2-13	3/4"	90Nm	130Nm
9/16-12	13/16"	130Nm	180Nm
5/8-11	15/16"	178Nm	250Nm
3/4-10	1-1/8"	315Nm	445Nm
7/8-9	-	509Nm	715Nm

Unless there are special torque requirements in the manual or other instructions, the tightening torque of general American bolts (thread mark: UNF) shall be implemented according to the following table.

Table 1-11 Tightening torque of fasteners - American (UNF)

Diameter（in）	Opposite dimension of nut（s）	American grade 5	American grade 8
1/4-28	7/16"	11.5Nm	16Nm
5/16-24	1/2"	23Nm	32Nm
3/8-24	9/16"	41Nm	58Nm
7/16-20	5/8"	65Nm	92Nm
1/2-20	3/4"	100Nm	145Nm
9/16-18	13/16"	145Nm	200Nm
5/8-18	15/16"	200Nm	280Nm
3/4-16	1-1/8"	350Nm	495Nm
7/8-14	-	560Nm	780Nm

Chapter 2 Important Safety Rules

2.1 Summary

This chapter covers how to use your machine correctly and safely in most applications. In order to achieve this goal, we have established a set of daily checklist, which is mandatory for qualified quality inspectors to carry out daily maintenance in strict accordance with this checklist, so as to ensure that the machine can operate without fault and ensure safe operation. Read, understand and comply with safety rules, job site requirements and government regulations.

Whether you are the owner, user or operator of the machine, before operating the machine for the first time， you must read and correctly understand the contents of this manual. The machine can only be operated independently after the whole process is operated from beginning to end under the supervision of qualified personnel with practical operation experience. If you have any questions about the use or operation of the machine, please call Hangcha group in time for consultation.

Most of the accidents involved in the operation, maintenance and repair process are caused by the failure to follow the basic safety operation procedures and precautions in the actual operation. In fact, if we can analyze the applied construction safety hazards and take corresponding safety measures before each construction operation, most accidents in practice can be completely avoided. Therefore, before each use and operation, it should be evaluated by the safety officer who has been trained and has the experience and ability of safety hazard analysis, and remind the personnel operating the machine to take necessary countermeasures to avoid the occurrence of danger.

Incorrect operation, lubrication, maintenance and repair are very dangerous, which may cause personal injury or casualties. Therefore, only after you read the manual thoroughly and fully understand the knowledge and information about operation, lubrication, maintenance and repair, can you take maintenance for the equipment.

2.2 Symbol Description

This safety symbol appears in most safety statements. This means that you need to pay attention and be vigilant at all times, and your safety will be affected! Please read and observe the relevant information of safety warning symbols.

Indicates an imminent danger. If not avoided, it could result in death or serious injury.

Indicates a potential danger. If not avoided, it could result in death or serious injury.

⚠
Indicates a potential danger. If not avoided, may cause slight or moderate injury to personnel.

Attention
Conditions that may cause damage to the power plant, loss of personal property or harm to the environment, or lead to improper operation of the equipment.

Note：these steps, instructions or conditions should be followed in order to make the power unit or component work in the expected way.

2.3 Accident Notification

In case of any accident involving the machinery of Hangcha Group Co., Ltd., Hangcha Group Co., Ltd. must be notified immediately. Even if there is no personal injury or property damage in the accident, Hangcha Group Co., Ltd. must be contacted by telephone and all necessary details must be provided.If the manufacturer is not notified within 48 hours after the accident involving the machinery of Hangcha Group Co., Ltd., the warranty of the product may be invalidated.

Attention
After any accident, thoroughly check the machine and its function. First test all functions from the ground controller, and then test from the platform controller. Before all damages are repaired and all controllers can be operated correctly, the lifting height must not exceed 3m.

2.4 Electric Shock Hazard

Note: This machine is not insulated and does not have the function of electric shock protection.

⚠
Electric Shock Hazard ➢ Follow relevant government rules and always keep a safe distance from power lines and electrical equipment. See 2-1 for details. ➢ Platform movement, wire swinging or sagging shall be considered, and strong wind or gust shall be avoided. Do not operate the machine in case of lightning or rainstorm. ➢ If the machine contact with live wires, stay away from the machine. Personnel on the ground or on the platform are not allowed to touch or operate the machine until the power is cut off. ➢ Do not use the machine as ground wire during welding, grinding and other operations.

All operators and managers shall comply with the relevant national or local regulations on the minimum safety distance of live conductors above the ground. If there is no such requirement, the operators and managers shall comply with the requirements of the minimum safety distance in.

Chart 2-1 Minimum safety distance of electrified body

Voltage range（Phase to phase， kV）	Minimum approach distance m（ft）
0~50	3（10）
50~200	5（15）
200~350	6（20）
350~500	8（25）
500~750	11（35）
750~1000	14（45）

2.5 Tip-over Hazard

Chart 2-2 Maximum rated load of platform

Rated load	GTHZ120	GTHZ170	GTHZ170C
Rated load	200kg	200kg	230kg
Maximum number of people allowed	2persons	2persons	2persons
Maximum manual operating force	400N	400N	400N

Tip-over Hazard

- Personnel, equipment and materials on the platform shall not exceed the maximum load capacity.
- The platform can only be lifted or extended when the machine is on solid and flat ground.
- Do not use the tilt alarm as a level indicator. The tilt alarm on the platform will sound only when the machine is heavily tilted. If the tilt alarm sounds: be very careful to lower the platform and transfer the machine to a solid and level ground. Do not change the level or limit switch.
- Do not drive faster than 0.6 km / h when the platform is lifted.
- When the platform is lifted, do not drive on uneven, unstable surfaces or other dangerous conditions.

Tip-over Hazard

- Do not operate the machine during strong wind or gust, and do not increase the surface area of the platform or load. Increasing the area exposed to the wind will reduce the stability of the machine.
- Take special care and slow down when driving on uneven or gravelly ground, or other unstable surfaces, and near holes and steep slopes.
- Do not push or pull any object outside the platform. The maximum allowable lateral force is 400N（90 lbf）.
- Do not change any machine parts that may affect safety and stability.
- Do not replace key parts that affect the stability of the machine with parts of different weights or specifications.
- Do not modify or change the aerial work platform without the written permission of the manufacturer.
- Do not install additional devices for placing tools or other materials on the platform or guardrail, which will increase the weight and surface area of the platform or increase the load.
- Do not place or fix any suspended load on any part of this machine.
- Do not place ladders or scaffolds in the platform or lean against any part of the machine.
- Do not use the machine on moving or moving surfaces or on vehicles. Ensure that all tires are in good condition and that the tire nuts are tightened.
- Do not use the platform to push the machine or other objects.
- Do not allow the platform to contact adjacent components.
- Do not tie the platform to adjacent components with ropes or other binding materials.
- Do not place loads outside the perimeter of the platform.
- Do not use the platform controller to lower the platform when the platform is tripped, stuck, or other nearby objects hinder its normal movement.If it is intended to lower the platform using the ground controller, it must be operated after all personnel leave the platform.

2.6 Working Environment Hazard

Unsafe Workplace Hazard

- Do not operate on surfaces, edges, or potholes that cannot support the weight of the machine. Only when the machine is on firm, level ground can the platform be lifted or extended.
- Do not use the tilt alarm as a level indicator. The tilt alarm on the platform sounded only when the machine tilted heavily.

Unsafe Workplace Hazard

- When the platform is lifted, if the tilt alarm sounds, carefully lower the platform and do not change the level or limit switch.
- Do not drive over 0.6km/h with the platform lifted.
- Do not operate the machine outdoors when there is strong winds or gusts. Do not lift the platform when the wind speed exceeds 12.5m/s(28mph). If the wind speed exceeds 12.5m/s(28mph) after lifting the platform, immediately retract the platform and stop the operation.
- Do not drive on uneven terrain, unstable surfaces, or other dangerous conditions with lifted platform.
- Take special care and slow down when driving the machine with retracted platform on uneven or gravelly ground, or other unstable surfaces, and near holes and steep slopes.
- Do not drive or lift the machine on slopes, steps, or arched ground that exceed its maximum slope rating.

Before or during the use of the machine, check the possible hazards in the workplace and pay attention to environmental restrictions, including flammable and explosive gases or dust.

Chart 2-3 The Beaufort Scale

scale	m/s	mile/h	Description	Ground conditions
0	0~0.2	0~0.5	Clam	No wind, smoke vertically up.
1	0.3~1.5	1~3	Light air	Smoke indicates wind direction.
2	1.6~3.3	4~7	Light brooze	Bare skin feels windy. Leaves rustle slightly.
3	3.4~5.4	8~12	Gentle breeze	Twig began to shake.
4	5.5~7.9	13~18	Moderate breeze	Dust and scraps of paper kicked up and twigs began to shake.
5	8.0~10.7	19~24	Fresh breeze	Saplings shook.
6	10.8~13.8	25~31	Strong breeze	Swaying branches, whistling overhead power lines, and difficult to open an umbrella.
7	13.9~17.1	32~38	Near gale	Tree shakes. Difficulty walking against the wind.
8	17.2~20.7	39~46	Gale	Broken branches. Vehicle offset direction.
9	20.8~24.4	47~54	Steong gale	Minor damage to the building.

Attention
Maximum slope rating applies to machines in the retracted position. Climbing capacity refers to the maximum slope rating when the machine is on firm ground and the platform is carrying only one person. The rating of the ramp decreases as the platform increases in weight.

2. 7 Unsafe Operation Hazard

The operation shall strictly comply with the requirements of this manual and maintenance manual. If the industry or local has more stringent regulations, the latter shall be followed.

Unsafe Operation Hazard

- Do not push or pull any object outside of the platform. Maximum allowable side force：Indoor 400N (90 lbf)
- Do not alter any machine parts that may affect safety or stability.
- Do not replace parts critical to machine stability with parts of different weights or specifications.
- Do not modify or alter the aerial work platform without the prior written permission of the manufacturer.
- Do not install additional devices to hold tools or other materials on the platform or guardrail. It will increase the weight and surface area of the platform or the load.
- Do not place ladder or scaffolding inside the platform or against any part of the machine.
- Do not operate machine on moving or mobile surfaces, or on vehicles. Ensure that all tires are in good condition and the tire nuts are properly tightened.
- Do not place or fix any overhang load on any part of the machine.
- Do not use the machine as a crane.
- Do not push the machine or other objects with the platform.
- Do not allow the platform to contact adjacent components.
- Do not tie the platform to adjacent components.
- Do not place loads outside the platform perimeter.
- Do not operate the platform controller to lower the platform when it is tripped, stuck, or blocked from normal movement by other nearby objects. If the platform is to be lowered by ground controllers, the operation must be performed only after all personnel have left the platform.
- When one or more tires are off the ground, evacuate all personnel before stabilizing the machine, and use crane, forklift, or other suitable equipment to stabilize the machine.

2.8 Fall Hazard

The operation of the machine shall strictly comply with the requirements of this manual and maintenance manual. If the industry or local has more stringent regulations, the latter shall be followed.

Fall Hazard

- Wear seat belts or use safety facilities in accordance with government regulations. Attach the lanyard to the anchor on the platform, and only one person can tie on an anchor.
- Do not sit, stand or climb on the platform guard rails. Maintain a firm footing on the platform floor at all times.
- Do not climb down from the platform when lifted.
- Keep the platform floor unobstructed.
- Do not enter or exit the platform unless the machine is fully retracted.
- Close the entrance door before operation.
- Do not operate the machine unless the guard rails are properly installed and the entry is secured.

2.9 Collision Hazard

The operation of the machine shall strictly comply with the requirements of this manual and maintenance manual. If the industry or local has more stringent regulations, the latter shall be followed.

Collision Hazard

- Be careful about limited sight distance and blind spots when driving or operating.
- Check the work area for overhead obstacles or other possible hazards.
- Be careful when using the platform controller and ground controller. The color marked direction arrows show the driving, lifting and steering functions.
- Users must comply with user, workplace and government regulations on "use of personal protective equipment" (Safety helmet, safety belt and gloves, etc）.
- Before releasing the brakes, the machine must be level or fastened.
- Lower the platform only when there are no people and obstacles in the bottom area.
- Limit travel speed based on ground conditions, congestion, ground slope, personnel location and any other factors that may cause a collision.
- Do not operate the machine in the range of any crane or mobile overhead unless the crane controller is locked or precautions have been taken to prevent any potential collision.
- Keep your hands and arms away from places where they may be squeezed.

Collision Hazard

- Do not work under the platform or in the scissor arms without the safety bar in place.
- Please maintain correct judgment and planning when operating the machine with the controller on the ground and keep a proper distance between the operator, the machine and the fixed object.
- No dangerous driving or horseplay when operating machine.

2.10 Crushing Hazard

There is a potential crushing hazard when moving the machine. Body parts and clothing should be kept at a safe distance from the machine at all times during operation.

Crushing Hazard

- Do not place your hands and arms near where they may be squeezed.
- Do not work under the platform or in the scissor arms without the safety bar in place.
- Please maintain correct judgment and planning when operating the machine with the controller on the ground and keep a proper distance between the operator, the machine and the fixed object.

2.11 Explosion and Fire Hazard

Explosion and Fire Hazard

Do not charge the battery, operate or fuel the machine in places that are dangerous or where flammable and explosive gases may exist.

2.12 Damaged Machine Hazard

Attention

Comply with the operation and maintenance requirements of the parts in this manual and the maintenance manual, otherwise the machine may be damaged.

Damaged Machine Hazard

- Unsafe operation hazard.
- Do not use damaged or malfunctioning machines.
- Conduct a thorough pre-operation inspection of the machine and test all functions before each work shift. Damaged or faulty machines should stop work and be marked immediately.
- Ensure that all maintenance operations have been performed according to this manual and related maintenance manual.
- Ensure that all labels are properly positioned and easily identifiable.
- Ensure that the operation and maintenance manual are complete, legible and kept in the storage container located on the platform.

2.13 Bodily Injury Hazard

Comply with the operation and maintenance requirements in this manual and the maintenance manual.

Bodily Injury Hazard

- Unsafe operation hazard.
- Do not operate the machine with a hydraulic oil leak. Hydraulic oil leak can penetrate or burn skin.

2.14 Battery Hazard

Battery Hazard

- The battery contains sulfuric acid and can produce an explosive mixture of hydrogen and oxygen. Any equipment that can cause sparks or flames (including cigarette / smoke materials) should be kept away from the battery to prevent explosion.
- Do not touch the battery terminals or cable clamps with spark generating tools.

2.15 Hydraulic System Hazard

Hydraulic System Hazard

- Do not touch the hydraulic system when it is at high temperature. Hot hydraulic oil can cause serious injury.
- Thoroughly clean the spilled hydraulic oil after the equipment stops working. Do not spill hydraulic oil on the ground. Wash any hydraulic oil off the skin as soon as maintenance and repair are completed. Dispose of used hydraulic oil according to legal regulations.
- Do not plug the leaking hydraulic oil by hand. If leakage occurs, the system pressure should be released first, and the hydraulic oil should be cooled before maintenance. Injuries caused by ignoring the dangers of hydraulic oil require immediate medical attention. Serious complications may occur if immediate treatment is not performed.

2.16 Weldment and Grinding Safety

Weldment and Grinding Safety

- Follow welder manufacturer's recommendations for proper use of welder procedures.
- Only after the power is turned off can connect the wire or cable for welding or grinding operations.
- Only after the wire or cable is properly connected can welding and grinding be carried out.
- Do not use the machine as ground wire during welding operations.
- Ensure that power tools are fully stored in the working platform at all times. Do not hang its wires on the guardrail of the work platform and the work area outside the platform, or hang power tools directly with the wires.

Before performing welding, grinding and polishing operations, the welder must obtain permission from the responsible department at the workplace.

2.17 Lockout after Each Use

1. Select a safe parking location—firm level surface, clear of obstruction and traffic.
2. Ensure that all panels and doors are closed and secured.
3. Before shutting down or not using for a long time, the hydraulic cylinder is forbidden to be in a fully extended state.
4. Press the emergency stop button of the platform controls to the off position.
5. Cover the platform control box to protect the panel, switch handle and controller from being damaged by harsh environment.
6. Press the "emergency stop switch" of the turntable control box to the "off" position.
7. Turn the "key switch" of the turntable control box to the "off" position and pull out the key to avoid unauthorized use.
8. Disconnect the power-off switch.
9. Charge the batteries.

Attention
The power-off switch must be turned off after each use.

Chapter 3 Working Principle and Each System

3.1 Energy

Driven by motor. It can be driven in the following ways:

The walking is driven by two 80V walking motors, and the boom movement is powered by one 80V oil pump motor to drive the gear pump.

3.2 Hydraulic System

The machine is driven by a motor. When the motor works, the high-pressure oil at the outlet of the gear pump drives the hydraulic actuator through the electric proportional flow valve and electromagnetic directional valve on the boom function valve group. According to the boom action with different flow demand, the electric control system output high-pressure oil with different flow by adjusting the motor speed.

3.3 Electrical System

An 80V lithium battery or lead acid battery pack is used to drive the 80V motor in the system to control the boom function and the walking steering function.

3.4 Machine Control

The system is controlled by two controllers. A controller is installed on the right side of the turntable of the machine to control the action of the boom; Another controller is installed on the platform to control the machine walking and boom action. The controller carries out data interaction through a CAN bus.

3.5 Safety Measures

- A series of sensors and limit switches provide signals to the controller.
- The angle sensor measures the angle of x-axis and Y-axis of the vehicle body. When the angle of x-axis or y-axis exceeds 3 °, an alarm will be sent out, and the functions of lifting, walking and steering will be limited.
- The lower arm sensor detects whether the upper and lower arms are lowered into place. When not in place, the equipment will be in the working state, and the maximum driving speed of the vehicle will be controlled at 0.6km/h.
- The telescopic arm sensor detects whether the telescopic arm is contracted in place. When not in place, the equipment will be in the working state, and the maximum driving speed of the vehicle will be controlled at 0.6km/h.
- Anti-tipping micro switch detects whether the anti-tipping device is in place. When the system detects that the device is in working condition and the anti-tipping micro switch is closed, the buzzer will sound an alarm and limit the rise, walk, and steering functions. （GTHZ120）
- Overload sensors detect the load on the fence. When the platform load exceeds the rated bearing capacity, the buzzer will sound frequently, the overweight indicator will flash, so relevant actions will be limited.

Chapter 4 Maintenance and Repair Guide

4.1 Summary

This section provides safety and necessary information to operators preparing to use this machine. In order to prolong the service life of the machine and ensure safe operation, ensure that all necessary inspections and maintenance work are completed before the machine is put into use.

Machine status description

- **Retracting status：** Retraction of boom is in place.
- **Working status / lifting status：** The pothole guards deploy（GTHZ120）；Travel switch detects that the upper arm, lower arm and telescopic arm is not retracted in place.

4.2 Preparation, Inspection and Maintenance

It is essential to develop and comply with complete inspection and preventive maintenance procedures. This manual provides the regular maintenance and inspection items recommended by Hangcha Group Co., Ltd. in detail. At the same time, please first understand the relevant laws and regulations of your country, region or place on aerial work platform. The frequency of inspection and maintenance shall be increased accordingly according to the specific environment, requirements and use frequency

4.3 Hangcha Approved Equipment Engineer

The equipment engineer recognized by Hangcha must have the following conditions: have a recognized educational background and certificate, have received comprehensive knowledge training on Hangcha products, and have the ability and level required for maintenance, repair and maintenance of relevant Hangcha product models.

4.4 Pre Operation Inspection

Before using every day or changing the operator every time, the user or operator should first conduct pre operation inspection. For the details of pre startup inspection, please refer to the chapter "pre operation inspection" in the operation manual, and be sure to read and understand the operation manual carefully

4.5 Pre Delivery Inspection and Daily Inspection

The pre delivery inspection must be carried out by the equipment engineer approved by Hangcha Group Co., Ltd. The inspection contents of pre delivery inspection and daily inspection are the same, but the time is different. A pre delivery inspection must be performed before each sale, lease or lease delivery. When the machine is used for 3 months or 150 hours (whichever comes first), or idle for more than 3 months, or

purchased as second-hand equipment, daily inspection must be carried out. The frequency of inspection shall be increased accordingly according to the specific environment, requirements and use frequency. Refer to the "preparation record before delivery" and "maintenance inspection report" in this manual to determine the items to be inspected. The inspection and maintenance steps shall be carried out with reference to the relevant contents of the "inspection procedures" in this manual.

4.6 Annual Inspection of Machine

The annual machine inspection must be carried out once a year and must not be more than 13 months from the date of the last annual machine inspection. Hangcha Group Co., Ltd. suggests that the factory's qualified maintenance engineer should carry out this work, and the maintenance engineer has received the relevant knowledge training of Hangcha products, and has the ability and level required to maintain, repair and maintain the relevant Hangcha product models.

Refer to the "maintenance inspection report" in this manual to determine the items to be inspected. The inspection and maintenance steps shall be carried out with reference to the relevant contents of the "inspection procedures" in this manual.

In order to obtain the safety report, Hangcha Group Co., Ltd. needs to update the ownership information of each machine. Please inform Hangcha group of the current ownership information of the machine every time you perform the annual inspection of the machine.

4.7 Preventive Maintenance

Preventive maintenance must be carried out by the equipment engineer approved by Hangcha Group Co., Ltd.

Refer to the "maintenance inspection report" and "maintenance schedule" in this manual to determine the items and time to be inspected. The inspection and maintenance steps shall be carried out with reference to the relevant contents of the "inspection procedures" in this manual.

Type	Frequency	Main responsibility	Maintenance Qualification	Reference
Preoperational inspection	Every day before use or every time the operator is changed	User or operator	User or operator	Operation manual
Advance payment inspection	Before each sale, lease or lease delivery	Owner,agent or user	Hangcha approved equipment engineer	Maintenance manual, "preparation record before delivery" "maintenance and inspection report"
Daily inspection	Use for 3 months or 150 Hours (whichever comes first), or idle for more than 3 months, or purchased as second-hand equipment	Owner,agent or user	Hangcha approved equipment engineer	Maintenance manual, "maintenance inspection report"
Annual inspection of machine	Check every year and no more than 13 months from the date of the last annual inspection of the machine	Owner,agent or user	Factory qualified maintenance engineer	Maintenance manual, "preparation record before delivery", "maintenance and inspection report"
Preventive maintenance	According to the time interval specified in the manual	Owner,agent or user	Hangcha approved equipment engineer	Maintenance manual, "maintenance inspection report", "maintenance schedule"

4.8 Precautions for Maintenance and Repair

4.8.1 Summary

This section is used to assist you in using and applying the repair and maintenance procedures contained in this manual.

4.8.2 Safety and Operation Standards

When carrying out machine maintenance, you should first consider the safety of yourself and others. Do not attempt to move heavy parts without the assistance of mechanical equipment. It is forbidden to park heavy objects in unstable positions. When lifting the components of the machine, ensure that there is sufficient support.

4.8.3 Clean

- The most important thing to prolong the service life of the machine is to prevent dirt or impurities from entering the key parts of the machine. Precautions have been taken to protect the machine from such violations. Protective plates, covers, seals and filters are used to keep the air, fuel and oil supplies clean. However, in order to ensure the normal function of protective measures, they should be maintained according to the specified time.
- When the air, fuel or oil pipelines are disconnected, the adjacent areas, openings and joints shall be cleaned. And immediately cover all openings to prevent foreign matters from entering.
- During repair or maintenance, all parts shall be cleaned and checked, and all pipelines and openings shall be unblocked. Cover all parts and keep them clean. All parts must be clean before installation. New parts should be stored in containers before use.

4.8.4 Component Removal and Installation

1. If mechanical assistance is required, please use adjustable lifting device as far as possible. All slings (chains, slings, etc.) shall be parallel to each other and as perpendicular to the top of the lifted part as possible.
2. If it is necessary to disassemble components at a certain angle, please note that the load capacity of eyebolts or similar supports will be reduced when the included angle between the supporting structure and components is less than 90 degrees.
3. If a part is difficult to disassemble, please check whether all nuts, bolts, cables, supports and wiring have been removed, and check whether adjacent parts hinder disassembly.

4.8.5 Component Disassembly and Reassembly

When disassembling or reassembling a component, complete the steps in sequence. If the disassembly or assembly of one part has not been completed, do not start the operation of another part. Please always review your work to ensure that there are no omissions. No adjustments (other than those recommended) shall be made without approval.

4.8.6 Pressed Parts

When assembling pressed parts, lubricate the mating surface with anti-seize type or molybdenum disulfide based compound.

4.8.7 Bearing

1. After removing the bearing, please cover it to avoid dust or wear. Clean the bearing with nonflammable cleaning solvent and dry it in the shade. Compressed air can be used, but do not rotate the bearing.
2. If the bearing race and ball (or roller) have pits, notches or burn marks, the bearing shall be scrapped
3. If the bearing can still be maintained, apply a layer of oil and use clean paper (or wax paper) package. Do not unpack reusable bearings or new bearings until they are ready for installation.
4. Before installation, lubricate the new bearing or refurbished bearing. When pressing the bearing into the bearing support or boring, apply pressure on the outer bearing race. If the bearing is to be installed on the shaft, apply pressure on the inner race.

4.8.8 Washer

Check that the hole in the washer is aligned with the opening of the mating part. If the gasket needs to be made by hand, the gasket material or other materials of equivalent material and thickness shall be used. Make sure that the hole is opened in the correct position, otherwise the gasket is not sealed, which may cause serious system damage.

4.8.9 Bolt Usage and Torque Application

Attention
Do not reinstall self-locking fasteners, such as nylon inserts and thread deformation lock nuts, after removal.

When installing locking fasteners, always use new replacements. Please use bolts with appropriate length. If the bolt is too long, it may be pushed on relevant parts before tightening its head on corresponding parts; If the bolt is too short, there will not be enough threaded parts to bite and fix the parts. When replacing bolts, only bolts with the same or equivalent specifications as the original bolts can be used.

In addition to the specific torque requirements given in this manual, standard torque values shall be used on heat treated bolts, studs and steel nuts in accordance with recommended factory practices.

4.8.10 Hydraulic Pipeline and Electrical Wiring

When unplugging or removing the hydraulic pipeline and electrical wiring from the equipment, the hydraulic pipeline and electrical wiring and their sockets shall be clearly marked. This ensures proper reinstallation.

4.8.11 Hydraulic System

1. Pollutants are the primary factor endangering the hydraulic system. Pollutants can invade through various ways, such as improper use of hydraulic oil, and water, grease, metal chips, sealing elements, sand, etc. enter the system during maintenance.
2. Keep the hydraulic system clean. If signs of metal or rubber particles are found in the hydraulic system, drain and flush the whole system immediately.
3. Disassemble or reassemble parts on a clean worktable. Clean all metal parts with nonflammable cleaning solvent. Lubricate components as needed to facilitate assembly

4.8.12 Lubrication

The relevant parts shall be lubricated at specified intervals with the lubricant of the quantity, type and grade recommended in this manual. If the recommended lubricant cannot be obtained, contact the local supplier to purchase the recommended lubricant or qualified lubricant.

4.8.13 Battery

Clean the battery with non-metallic brush, sodium bicarbonate and aqueous solution, and then rinse with clean water. After cleaning, after the battery is completely dry, coat the battery terminals with anti-corrosion compound.

4.9 Pin Shaft and Composite Bearing

- In case of one of the following situations, the connecting pin shall be disassembled and inspected:
  - The connector is too tilted.
  - Noise at joints during operation.
- In case of any of the following situations, the composite bearing shall be replaced:
  - Wear or separation of fibers on the bushing surface.
  - Broken or damaged bearing liner support.
  - The bearing has moved or rotated into the bearing pedestal.
  - Debris is embedded in the bushing surface.
- Replace the pin shaft in case of any of the following situations (clean the pin shaft correctly before inspection):
  - Wear found in bearing area.
  - There are flakes, peeling, scratches or scratches on the surface of the pin shaft.
  - The pin shaft in the bearing area is rusted.
- Reassemble the connecting pin and composite bearing：
  - Dirt and debris should be blown off the bearing pedestal. There shall be no foreign

matters on the bearing and bearing seat.

- Bearings and pins shall be cleaned with cleaning agent to remove all grease and lubricating oil. The composite bearing is a dry joint and does not need lubrication.
- During installation and operation, the pin shaft shall be checked to ensure that there are no burrs, notches or scratches that may damage the bearing.

4.10 Use Insulating Silicone Grease at the Electrical Connection Position

Insulating silicone grease shall be used for all electrical connections in order to:

Prevent the mechanical connector between male and female pins from being oxidized.

Prevent electrical failure caused by low conductivity between rows of needles due to humidity

Please use insulating silicone grease at the electrical connection position according to the following steps. This procedure is applicable to all plug connections installed outside the distribution box. Silicone grease is not suitable for external sealing connectors.

1. In order to prevent oxidation, silicone grease shall be applied around the male and female pins inside the connector before machine assembly. It can be operated with a syringe.

Attention
Oxidation for more than a certain time will increase the resistance of the connector and eventually cause circuit failure.

2. In order to prevent short circuit, each wire exposed to the connector housing shall be coated with silicone grease. In addition, silicone grease shall also be used at the joint where the male plug and female plug are connected to each other. Other joints that may cause water to enter the connector (around the anti-pull buckle, etc.) shall also be sealed.

Attention
Since the conductivity of cleaning solvent is stronger than that of water, this kind of situation is particularly easy to occur when using pressure cleaning method to clean the machine.

3. Connectors suitable for battery box and battery charger shall be sealed with silicone grease.

Attention
Solidified sealant can also be used to prevent short circuits and help keep them clean, but it will be more difficult to remove pins later.

Chapter 5 Maintenance

This section provides detailed operating procedures for periodic maintenance and inspection.

⚠ Warning

Unsafe operation hazard

Failure to perform proper maintenance may result in death, serious injury or machine damage.

⚠ Warning

High pressure hazard

Before loosening or removing the hydraulic element, release the pressure inside the element, especially the balance valve on the cylinder.

Follow the following rules:

- Maintenance inspection must be carried out by professionally trained and qualified personnel.
- Routine maintenance inspection refers to the inspection items during normal operation of the machine every day. The maintenance and inspection personnel must carry out inspection and maintenance according to the maintenance and inspection report and fill in the maintenance and inspection report in detail.
- Regular maintenance and inspection shall be carried out quarterly, semiannually and annually. The maintenance and inspection personnel must carry out inspection and maintenance according to the maintenance and inspection report and fill in the maintenance and inspection report in detail.
- Remove the damaged or faulty machine in time, mark it in time, and stop the operation at the same time.
- The damaged or faulty machine must be repaired before operating the machine.
- All inspection records shall be kept for at least 10 years or until the machine is out of use or as required by the machine owner / company / custodian.
- Machines that have not been maintained for more than three months must be inspected quarterly.
- The parts replaced during maintenance shall be the same as or equal to the parts of the original machine.

Unless otherwise specified, maintenance procedures shall be performed in accordance with the following provisions:

- Place the machine on a flat, level and firm ground.

- The machine is not working.
- Place the "key switch" of the ground controller in the "off" position and remove the key to make the equipment unable to start.
- Set the red "emergency stop switch" on the platform control box and ground controller to the "off" position to avoid accidental startup of the operating system.
- Disconnect the power-off switch.
- Disconnect all DC power on the machine.
- Lock all tires to prevent the machine from moving.

5.1 Pre Delivery Inspection

When the machine owner / company changes, in addition to the pre delivery inspection, the corresponding inspection shall be carried out according to the maintenance inspection time requirements and inspection procedures.

The pre delivery inspection shall comply with and comply with the following requirements:

- It is the responsibility of the machine owner / company to perform pre delivery inspection.
- This step must be performed before each delivery in order to find out whether there are obvious errors before the machine is put into use.
- Damaged or faulty machines shall not be used. Once a damaged or abnormal machine is found, it must be labeled and removed.
- The maintenance of the machine must be completed by qualified maintenance technicians in strict accordance with this manual.
- Routine maintenance must be completed by qualified maintenance Technicians according to the provisions of this manual.
- Before delivering the machine, fill in the following records according to the following instructions:
- Preparations before delivery include pre operation inspection, maintenance procedures and function test.
- Use this form to record the results. After completing each part, tick the corresponding box.
- If any inspection result is "no", the machine must be stopped, and the machine must be rechecked after maintenance, and a mark must be ticked in the box marked "repaired".

Table 5-1 preparation record before delivery

Product model			
Factory number			
Inspection items	YES (The machine is in good condition)	NO (Machine damage or failure)	REPAIRED (The machine has been repaired)
Pre operation inspection			
Maintenance procedure			
Function check			
Machine buyer / lessee			
Signature of inspector			
Inspection date			
Inspector post			
Inspector unit			

5.2 Maintenance Schedule

Regular maintenance inspections must be carried out every day, every quarter, and every year. Use this form to help you comply with the routine maintenance plan.

Table 5-2 Maintenance schedule

Inspection interval	Inspection procedure
Every day or every 8 hours	A
Quarterly or every 150 hours	A+B
Every year or every 600 hours	A+B+C

5.3 Maintenance Inspection Report

- The maintenance inspection report is divided into four sections (A, B and C) according to the maintenance procedure, the time requirements of the maintenance plan and the requirements of the maintenance procedure.

- The maintenance inspection report contains a checklist for each type of periodic inspection.
- Copy the maintenance inspection report for each inspection. The completed form shall be kept for at least 10 years or until the machine is out of use or at the request of the machine owner / company.
- Use the table below to record the results. After completing each part, tick the corresponding box.
- If any inspection result is "no", the machine must be stopped, and the machine must be rechecked after the maintenance is completed, and a mark must be ticked in the box marked "repaired". Select the appropriate inspection procedure according to the inspection type.。

Table 5-3 Maintenance inspection report

Maintenance inspection report					
Product model					
Factory number					
Inspection procedure A					
NO.	**Project**	**YES** The machine is in good condition	**NO** Machine damage or failure	**REPAIRED** The machine has been repaired	**Problem description**
A-1	Check each manual				
A-2	Check each label				
A-3	Check for damaged loose or missing parts				
A-4	Check the hydraulic oil level				
A-5	Check hydraulic oil leakage				
A-6	Function check				
A-7	Check the battery level				
A-8	Perform 30 day maintenance				

Maintenance inspection report					
Inspection procedure B					
NO.	**Project**	**YES** The machine is in good condition	**NO** Machine damage or failure	**REPAIRED** The machine has been repaired	**Problem description**
B-1	Check and replace the hydraulic oil tank return filter element				
B-2	Check the rims and tires and their fasteners				
B-3	Check hydraulic oil				
B-4	Check the angle sensor				
B-5	Check the oil level in the drive reducer				
B-6	Check the connecting bolts of slewing support				
B-7	Lubricate slewing support				
B-8	Check the cylinder offset				
B-9	Check the wires				
B-10	Check the battery				
B-11	Test travel speed				
B-12	Check the emergency decent function				
B-13	Check the tilt protection system				

Maintenance inspection report					
Inspection procedure C					
NO.	**Project**	**YES** The machine is in good condition	**NO** Machine damage or failure	**REPAIRED** The machine has been repaired	**Problem description**
C-1	Replace the gear oil in the drive reducer.				
C-2	Replace the gear oil in the swing reduce. （GTHZ120）				
C-3	Change hydraulic oil				
C-4	Replace the hydraulic oil tank suction filter				
C-5	Check the boom slider				

5.3.1 Inspection Procedure A

A-1 Check each manual

Putting the operation manual and maintenance manual in a proper place is very important for the safe operation of the machine and should be placed in the document box specially storing the manual on the platform. If the manual is missing or illegible, it will not provide necessary safe operation information.

- Check and confirm that the document box is installed in a proper place on the platform.
- Check and confirm that the operation manual and maintenance manual are intact in the document box on the platform.
- Check the pages of each manual to ensure that the handwriting is clear and intact
- Put the manual back into the document box after use.

Note: If you need to replace the manual, please contact Hangcha Group Co., Ltd.

A-2 Check each label

Ensuring that all labels are in good condition is essential for the safe operation of the machine. Labels remind operators of the dangers they may encounter during

operation, and they provide users with operation and maintenance information. Illegible labels cannot correctly guide operators, which may lead to unsafe operation.

- Refer to the "label / nameplate inspection" section in the operation manual and use the label list and chart to determine the correct position of the label.
- Check whether all labels are legible and damaged, and replace the damaged and illegible labels in time.

Note: if the label needs to be replaced, please contact Hangcha Group Co., Ltd. In time.

A-3 Check all damaged, loose or missing parts

Check the following components or areas for damage, improper installation, loose or missing parts and unauthorized changes:

- Electrical components, wiring and cables.
- Hydraulic hose, pipe joint, hydraulic cylinder and valve block group.
- Hydraulic oil tank.
- Battery pack and its connection.
- Walking motor, rotary motor and reducer.
- Boom slider and telescopic shaft slider.
- Limit switch and horn.
- Tires and rims.
- Alarms and lights (if equipped).
- Platform guardrails and doors.
- Cracking of structural members and welds.
- Nuts, bolts and other fasteners.

Attention
In case of damage, improper installation or missing parts, replace them immediately and install them correctly; If the fastener is found to fall off or loose, it shall be fastened immediately

A-4 Check the hydraulic oil level

Maintaining the hydraulic oil at the proper level is very important for the operation of the machine. If the hydraulic oil level is too high, the oil will overflow from the oil tank during the use of the equipment; If the hydraulic oil level is too low, the oil pump will be empty and the hydraulic components will be damaged during the use of the equipment. Through daily inspection, the inspector can determine the change of hydraulic oil level, which can indicate potential problems

in the hydraulic system.

When the boom is in the retracted state, perform the following steps:

- Open the left cover and visually inspect the side of the hydraulic tank. The
- hydraulic oil level shall be within the scale area of 50L~60L.
- Ensure that there is no leakage between the hydraulic oil tank body and the connector.
- Add hydraulic oil as needed, do not add too much.

Table 5-4 Hydraulic oil

Customer requirements	Hydraulic oil brand
Normal temperature area 0℃~40℃ (32℉~104℉)	L-HV46
Cold temperature area -25℃~25℃ (-13℉~77℉)	L-HV32
High temperature area ＞40℃ (104℉)	L-HM68
Extremely cold area ＜-30℃ (-22℉)	Special scheme needs to be determined

A-5 Check hydraulic oil leakage

Preventing hydraulic oil leakage is very important for the safe operation and normal operation of the machine. If a leak is not found, a dangerous situation will occur, weaken the performance of the machine and damage the components.

Observe whether hydraulic oil overflows, drips or remains on or around the following components:

- Hydraulic oil tank, filter, pipe joint, oil pipe, manual pump
- All hydraulic cylinders, hydraulic valve groups and pumps
- Boom part
- Slewing bearing
- Drive chassis
- Area around the machine

A-6 Function check

Checking the functions of the machine is very important for the safe operation of the machine. If any function fails to work properly, unsafe conditions will occur. Any function shall work stably and reliably without shaking, violence and abnormal noise.

Unsafe operation hazard

Be sure to follow the instructions and safety rules in this manual and operation manual. Failure to follow the instructions and safety rules in this manual and operation manual may lead to death or serious injury.

Refer to the operation manual "pre operation function test" for the complete steps of the machine function check. Before performing this function check, be sure to fully read and understand the safety rules in the operation manual.

Control and indication description

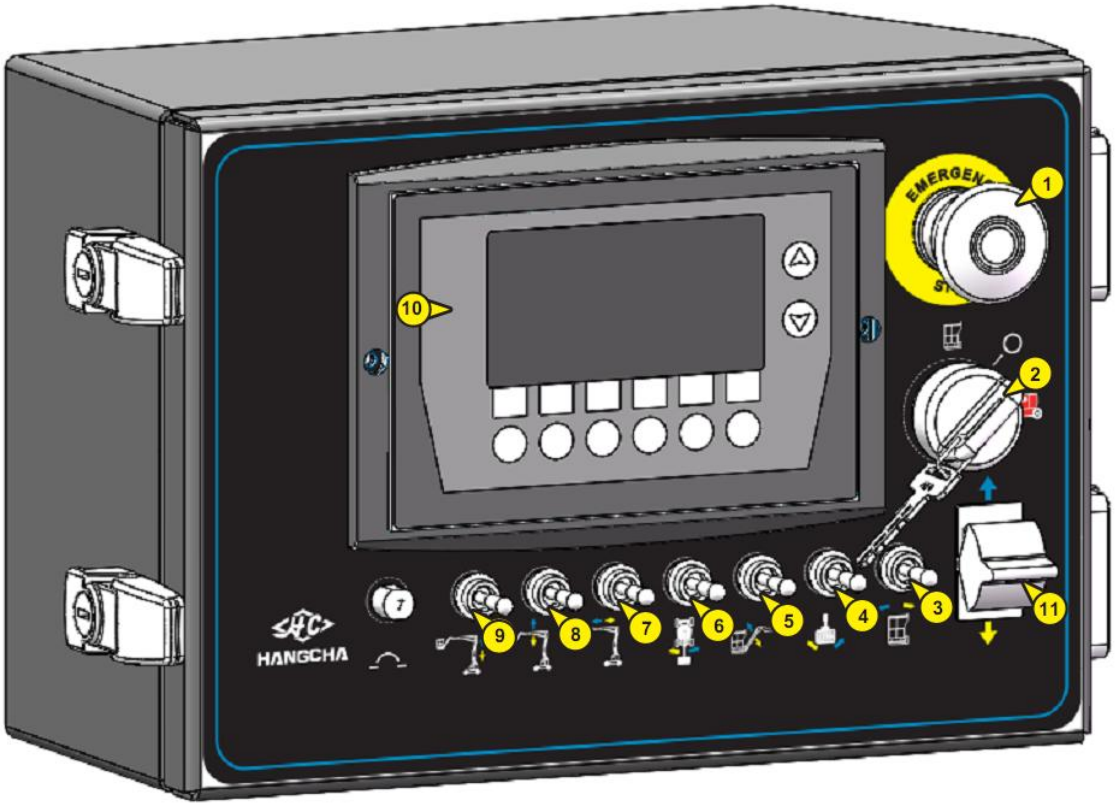

Figure 5-1 schematic diagram of lower control panel

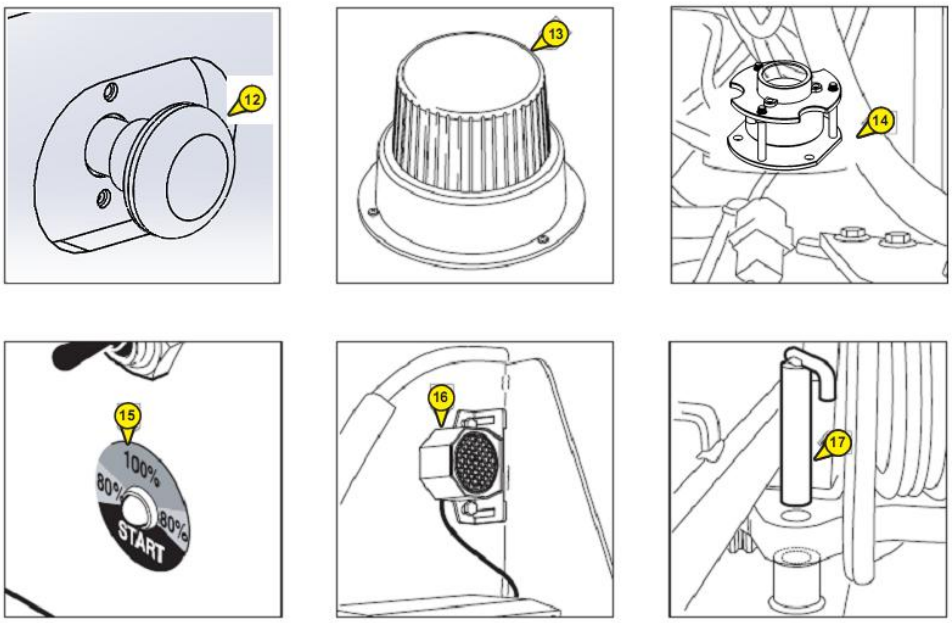

NO.	NAME	DESCRIPTION
1	**Emergency stop switch** 	Red two position control switch , used to stop the machine in an emergency: (1)In case of emergency, press the button down to cut off the power supply of the system; (2) Before starting the system, the emergency stop buttons on the lower and upper control panels must be in the pop-up position. Otherwise, the system cannot start. Turn the mushroom head clockwise to release the emergency stop switch.
2	**Up / down control switch** 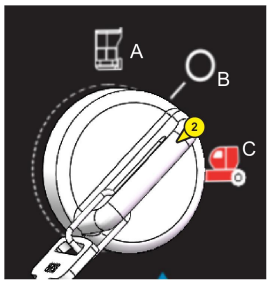	The up / down control switch is a three position key control switch, used to select whether to operate with the lower controller or the upper controller: ■ When the key switch is in the middle position, cut off the power supply of the upper / lower controller. ■ Rotate the key switch counterclockwise to the left, select the upper control to operate the machine. The lower control does not work. ■ Turn the key switch clockwise to the right and select the lower control operation. The upper control of the machine does not work. **Attention:** (1) after operating the machine, press the emergency stop button on the upper / lower controller to turn the machine off; (2) After the machine is used, turn the key to the middle position, and then pull out the key to cut off the power supply of the machine to prevent unauthorized personnel from disoperation.

NO.	NAME	DESCRIPTION
3	**Fence tilt button**	The fence tilt button is a self-resetting two - position handle switch. After automatic leveling, if the working platform is tilted, the operator can correct the working platform with this handle switch. When the working platform slopes down, toggle button 3 up and hold, push the direction selection button 11 down, release the button until the platform is in a horizontal position, and the button automatically resets to the median. When the working platform tilts upward, toggle button 3 up and hold, push the direction selection button 11 up, release the button until the platform is in a horizontal position, and the button automatically resets to the middle. Note: When the platform is tilted, it needs to be carefully corrected with manual leveling. However, incorrect use of hand leveling may cause the personnel or cargo inside the platform to flip or even fall off the platform. The failure of manual leveling of the working platform can cause serious accidents and even casualties.
4	**Fence turning button** 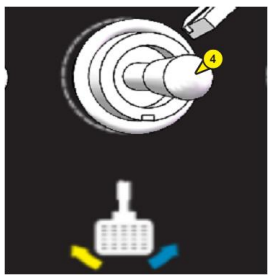	The fence tilt button is a self-resetting two-position handle switch that controls the working fence to turn left or right. Toggle button 4 up and hold, push down the direction selection button 11, turn the working platform to the left, and the button automatically resets to the median. Toggle button 4 up and hold, push the direction selection button 11 up, turn the working platform to the right, and the button automatically resets to the middle.
5	**Swing arm luffing button** 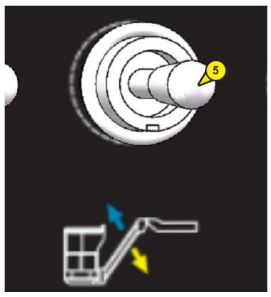	The swing arm luffing button is a self-resetting two-position handle switch that controls the lifting or lowering of the forearm. Toggle button 5 up and hold, push the direction selection button 11 up , the swing arm is lifted, and the button automatically returns to the middle. Toggle button 5 up and hold, push the direction selection button 11 down , the swing arm drops, and the button automatically resets to the median.

NO	NAME	Description
6	**Body rotation button** 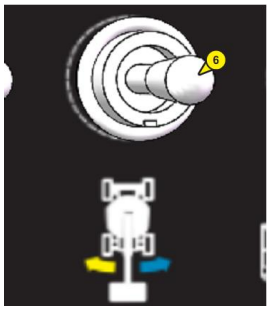	The body rotation button is a self-resetting two-position handle switch that controls the body to turn left or right. Toggle button 6 up and hold, push the direction selection button 11 up, turn the body to the right, and the button automatically resets to the middle. Toggle button 6 up and hold, push the direction selection button 11 down, turn the body to the left, and the button automatically returns to the median.
7	**Telescopic boom telescopic control switch** 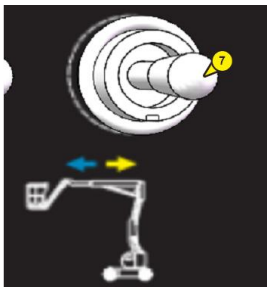	The telescopic boom telescopic control switch is a self resetting two position toggle switch, which is used to control the telescopic function of the telescopic boom. ➢ Toggle button 7 up and hold, push the direction selection button 11 up, the telescopic arm extends, and the button automatically resets to the median. ➢ Toggle button 7 up and hold, push the direction selection button 11 down , telescopic arm contraction, the button automatically reset to the middle.
8	**Upper arm luffing button** 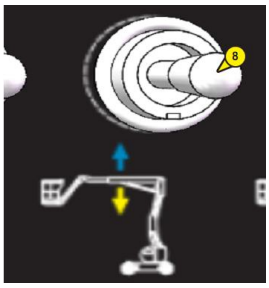	The upper arm luffing button is a self-resetting two-position handle switch that controls the upper arm lift or lower. Toggle button 8 up and hold, push the direction selection button 11 up, the upper arm is lifted, and the button automatically returns to the middle. Toggle button 8 up and hold, push the direction selection button 11 down, the upper arm drops, and the button automatically resets to the median.
9	**Lower arm luffing button** 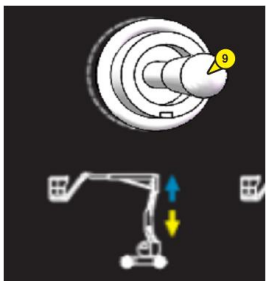	The lower arm luffing button is a self-resetting two-position handle switch that controls the lower arm lifting or lowering. Toggle button 9 up and hold, push the direction selection button 11 up, the lower arm is lifted, and the button automatically returns to the median. Toggle button 9 up and hold, push the direction selection button 11 down, the lower arm drops, the button automatically reset to the middle position.

NO	NAME	DESCRIPTION
10	**Display table**	Multi-function display table for displaying： ● Cumulative working time ● Battery capacity ● Fault code
11	**Direction control button** 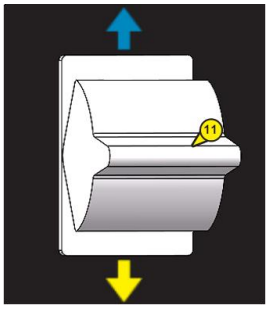	The Direction control button is a self- resetting three position handle switch, used together with the function action switch, without action when used alone.
12	**Power switch** 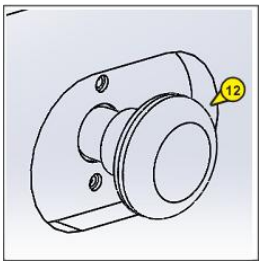	The power switch is on the side of the rear cover Outward switch: the power is on. Inward switch: Power is cut off.
13	**Flash（if equipped）** 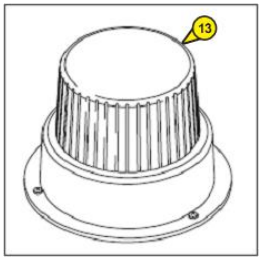	When the aerial work platform walking or doing action, the flash automatically flashes.

NO	NAME	DESCRIPION
14	**Angle sensor** 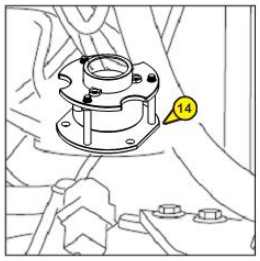	This sensor monitors the angle of the aerial working platform. When the slope angle of the aerial operation platform is greater than the allowable angle, the alarm device will give a discontinuous beeping alarm. The indicator on the platform will light up.
15	**Battery charge indicator light** 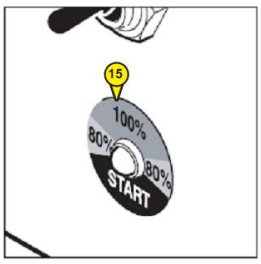	Indicator light shows different colors according to the battery state: Red light: - The battery must be charged. Yellow light: - The battery is 80% charged. A green light: - Battery charge completed.
16	**Buzzer** 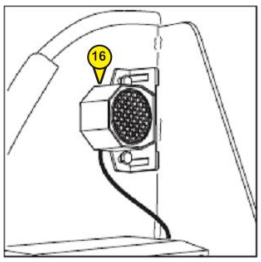	When we press the horn button 29, the buzzer 16 alarms.
17	**Body rotation positioning pin** 	The body rotation positioning pin is used to lock the body steering of the aerial working platform fixed in place. Insert the pin into the hole for locking. This function must be used when a vehicle such as a truck or a train is used to transport an aerial work platform. Note: Do not forget to remove the body rotation positioning pin before mounting the fence.

Upper console

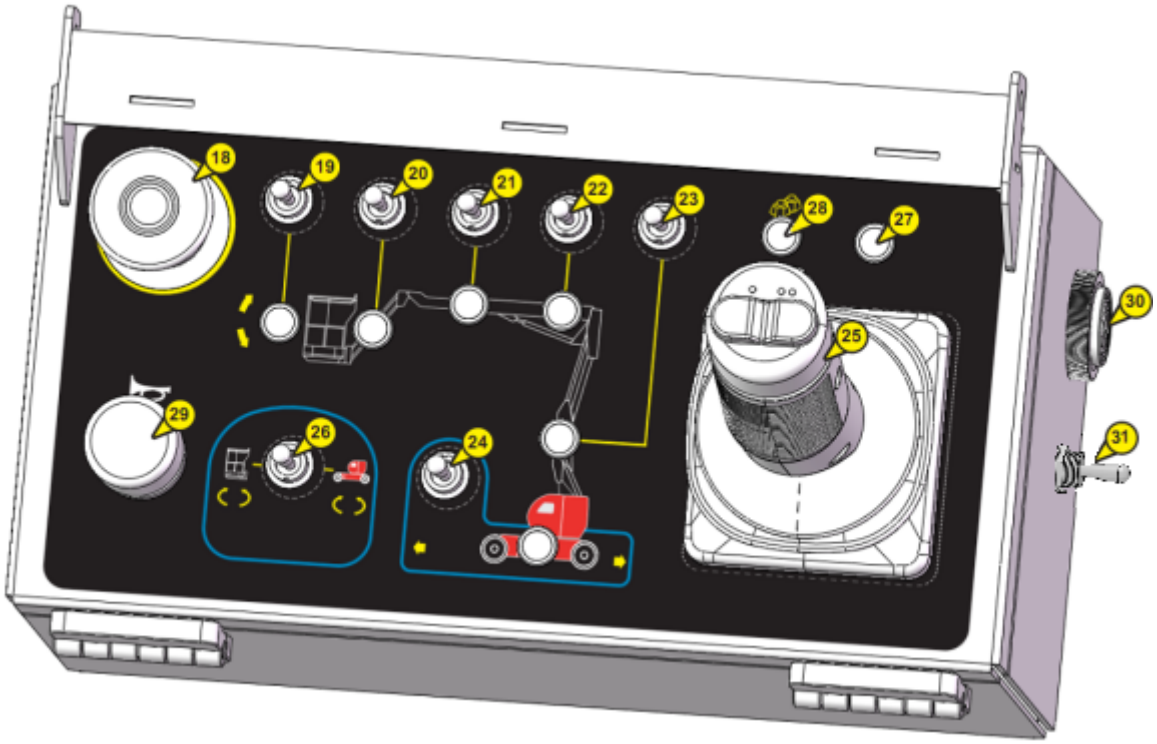

Figure 5-2 Upper control panel

NO	NAME	DESCRIPTION
18	**Emergency stop switch** 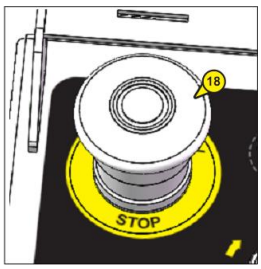	Two-position button control switch in the shape of red mushroom head is used to stop the machine in case of emergency. (1) Directly press the button to cut off the system power supply in case of emergency. (2) Before starting the system, the emergency stop button of the lower /upper control panel must be in the unpressed position; otherwise, the system cannot start. Turn the mushroom head clockwise to release the emergency stop button.

NO	NAME	DESCRIPTION
19	**Platform leveling control switch** 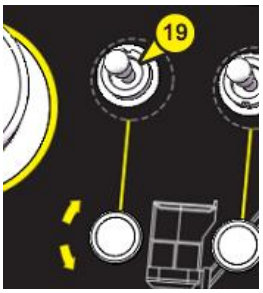	Platform leveling control switch is a self–resetting handle switch. After automatic leveling, if the working platform is tilted, the operator can use this handle switch to correct the working platform ■ When the working platform is tilted down, toggle the handle in the direction of the upward arrow and hold until the platform is in a horizontal position. Then release the handle, it automatically reset to the middle. ■ When the working platform is tilted upwards, toggle the handle in the direction of the downward arrow and hold until the platform is in a horizontal position. Then release the handle, the it automatically reset to the middle. Note: Platform leveling can be performed only in the retracted state.
20	**Forearm luffing control switch** 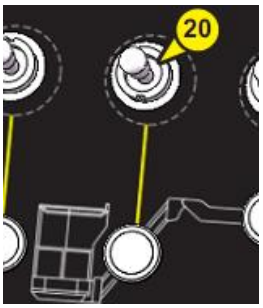	Forearm luffing control switch is a self-resetting handle switch used to control the forearm luffing. ■ Pull the handle and hold along the upward arrow direction, and the forearm is luffing until it reaches the maximum angle. After releasing the handle, it automatically resets to the middle. ■ Pull the handle and hold along the downward arrow direction, and the forearm is luffing down until it reaches the lowest position. After releasing the handle, it automatically resets to the middle.
21	**Telescopic arm control switch** 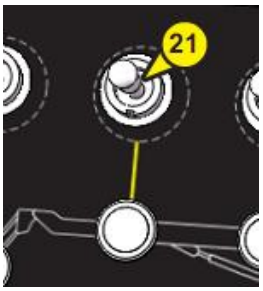	Telescopic arm control switch is a self-resetting handle switch used to control the telescoping function. ■ Pull the handle and hold along the arrow direction to the left, extending the telescopic arm until it reaches its maximum length. After releasing the handle, it automatically resets to the middle. ■ Pull the handle and hold along the arrow direction to the right, and retracting the telescopic arm until it reaches its minimum length. After releasing the handle, it automatically resets to the middle.

NO	NAME	DESCRIPTION
22	**Upper arm lift/lower button** 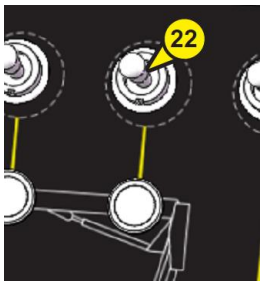	Hold the enable switch and push the handle forward as the boom rises and push the handle backward as the boom falls. Hold the enable switch, push the handle to the left and the tower rotates to the left, push the handle to the right and the tower rotates to the right.
23	**Lower arm lift/lower button** 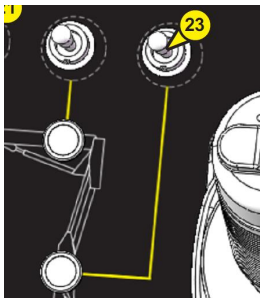	Hold the enable switch and push the handle 25 forward to lift the boom and push the handle backward to lower the boom.
24	**Walking button** 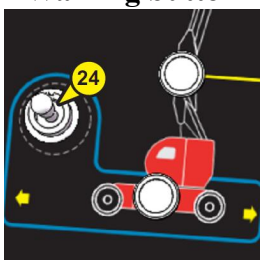	Hold the enable switch, push the handle forward, the car moves forward； push the handle back 25 the car moves backward. Hold the enable switch and press the left thumb switch button above the handle to turn the front wheel to the left. Press the right thumb switch button to turn the front wheel to the right. Note: Walking and steering can be done at the same time, but will reduce walking speed.
25	**Control handle** 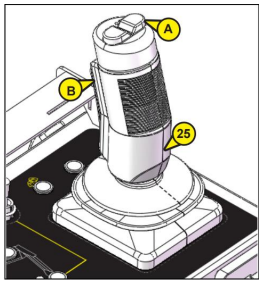	The control handle can be pushed forward, backward, left, right, can be stepless speed regulation, the greater the range, the faster the speed. B on the front of the handle is the enable switch, and A on the upper is the thumb switch. Through the function button combined with the control handle to control the device to do the corresponding action.

NO	NAME	DESCRIPTION
26	**Rotating position selector switch** 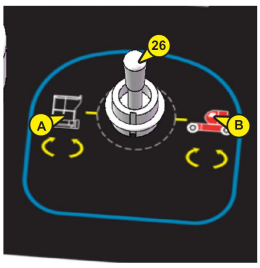	The rotating position selector switch is a three - position handle switch. Normally, the switch is in the middle position. Turn the switch to the left A, hold the enable switch, push the handle 25 left/right, and turn the fence left/right. Turn the switch to B on the right side, hold the enable switch, push the handle 25 left/right, and turn the body left/right. Note: Switch back to the middle position after finishing the action.
27	**Angle tilt alarm light** 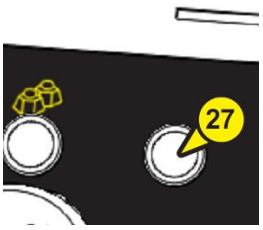	When the slope angle of the aerial working platform is greater than the maximum allowable angle of 3°, the indicator is on, and the lifting action of all bending arms is locked.
28	**Overload and controller faulty alarm light** 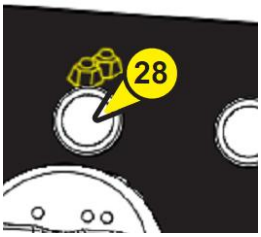	This lamp does two things: The indicator lights when overloaded. When a fault occurs, the alarm light is on and the fault code is displayed on the panel of the lower control box.
29	**The horn button**	The siren 16 is mounted in the rotating part of the body, and it sounds when we press the horn button 29.

NO	NAME	DESCRIPTION
30	**Alarm buzzer** 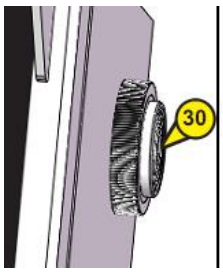	This buzzer works in two situations: Intermittent hum: When the slope of the machine exceeds the allowed maximum, all actions are stopped. All that can be done is to lower the folded arm and withdraw the telescopic arm, so that the machine can be returned to a state suitable for slant. Continuous beeping: When the load of the machine exceeds the allowed maximum, all actions are stopped and all that can be done is to lower the folded arm and retract the telescopic arm.
31	**Forced unlock switch** 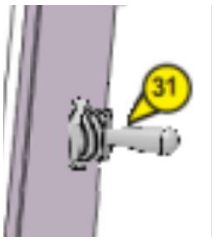	When the machine is in failure and alarm (the alarm is a non-fatal safety alarm), the switch can be flipped to achieve emergency lowering. Warning: This switch is only allowed to be used in emergency situations when the machine needs to be moved, or in special working conditions such as loading, and the safety of personnel must be ensured when used. Random use may cause the machine to tip over or casualties.

A-7 Check the battery level

Turn the "ground / platform control switch" of the turntable control box to the "ground control position", and the panel of the turntable control box will display the percentage of battery power.

A-8 Perform 30 day maintenance

30 day maintenance refers to a one-time maintenance performed after 30 days or 50 hours of new equipment use. After performing this maintenance, perform relevant maintenance at normal intervals.

Perform the following 30 day maintenance procedures:

- B-1 check and replace the hydraulic oil tank return filter
- B-2 check the rim and tire and their fasteners
- B-13 check the connecting bolts of Slewing Support

5.3.2 Inspection Procedure B

B-1Check and replace the hydraulic oil tank return filter element

Regular replacement of the filter element of the return oil filter of the hydraulic oil tank is very important for the normal operation of the hydraulic system and prolonging the service life of the equipment. A filter with poor cleanliness or blockage may cause the machine to work abnormally, and the continued use may cause component damage.

Working in a particularly harsh working environment requires frequent replacement of the filter element of the oil return filter.

Burn hazard

Allow the hydraulic oil to cool to room temperature before servicing the hydraulic system.

Attention

The inspection must be carried out with the machine switched off.

Check as follows

1. Open the left cover of the machine turntable.
2. Find the oil return filter at the hydraulic oil tank.
3. Remove the oil return filter with a wrench.

High pressure hazard

Slowly remove the hydraulic components to reduce the hydraulic oil pressure. High hydraulic oil pressure may penetrate the skin. If you are injured, please see a doctor immediately.

4. Loosen the top end cover of the filter and take out the filter element.
5. Apply a thin oil film on the gasket of the new oil return filter.
6. After cleaning the oil return filter housing and installing a new filter element,
7. reinstall the oil return filter.
8. Clean up the spilled hydraulic oil during execution.
9. Start the machine from the ground controller.
10. Check the filter and related parts to ensure no leakage

B-2 Check the rims and tires and their fasteners

Maintaining the rims and tires and their fasteners is very important for the normal and safe operation of the machine. Problems with rims or tires may cause the machine to tip over. Any problems with rims and tires need to be repaired before operating the machine.

This machine uses solid tires or foam tires and does not need inflation

1. Check the tire every day. If any of the following conditions are found, take immediate measures to stop using the machine and replace the tire or tire assembly (including rim).

- Tyre delamination, i.e. circumferential cracks or delamination between rubbers.
- Off ring, that is, the rubber is separated from the steel ring.

- The rubber surface falls off locally.
- The rubber cracks along the diameter direction.
- The rubber is worn to the wear line.

2. Check whether the tire nuts are tightened with the specified torque of 250Nm

Attention
Tire nuts should be tightened before first use and after each tire is removed. Check and adjust the torque every 3 months or 150 hours of operation.

B-3 Check hydraulic oil

Checking the hydraulic oil is very important for the normal operation and service life of the machine. The hydraulic oil with unqualified cleanliness may cause abnormal operation of the machine, and continued use may cause damage to hydraulic parts. Particularly harsh working environment requires frequent replacement of hydraulic oil.

Note: Due to the wear of hydraulic components, metal particles may appear in the hydraulic oil or filter of the new machine.

high temperature hazard

Allow the hydraulic oil to cool to room temperature before servicing the hydraulic system.

In case of any of the following conditions, the hydraulic oil shall be replaced in time:

- The hydraulic oil is milky white and turbid
- The hydraulic oil is black
- Take out part of the hydraulic oil and check it in the sun. There are metal luminous points, or there is an obvious sense of particles when rubbing with two fingers dipped in the hydraulic oil.
- The hydraulic oil stinks.

B-4 Check the sensor

Regular inspection of the angle sensor and travel switch is essential for the safe operation of the machine. If the sensor and travel switch do not work properly, unsafe conditions will occur.

Check the lower arm sensor

1. Turn the Ground/Platform control switch in the turntable control box to the Platform control position.

2. Switch the "emergency stop" button ON the turntable control box and platform control box to the "on" position.
3. Lower the lower arm of the device to the bottom and fully retract the telescopic arm.
4. Operate the handle to control the running of the device. The maximum speed of the device should be the speed in non-working state (Table 5-5).
5. Raise the lower arm up to 3m.
6. Switch to the walking button and control the handle to control the device walking. If the speed of the device is slow (0.6km/h), the lower arm sensor is normal; If the speed of the device is fast at this time, the sensor of the lower arm may be damaged. The sensor needs to be replaced and debugging.

Debug lower arm sensor

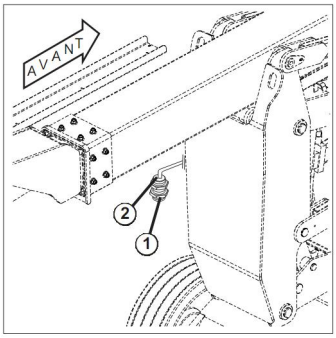

1. Control the lower arm to the bottom
2. Remove the cover protecting the sensor, loosen nut 1, and loosen or tighten nut 2 until the light on the sensor turns on (orange) and the gap between the support and the sensor is approximately 3mm.
3. Tighten nut 1.
4. Install the cover.

Check the telescopic boom sensor

1. Turn the “ground/platform control switch” in the turntable control box to the platform control position.
2. Switch the “emergency stop button” on the turntable control box and platform control box to the "on" position.
3. The lower arm of the equipment is lowered to the bottom, and the telescopic arm is fully retracted.
4. Operate the handle to control the walking of the device. The maximum speed of the device should be the speed in non-working state (Table 5-5).
5. Extend the telescopic boom.
6. Switch to the walking button, the handle controls the device walking. If the speed of the equipment is slow (0.6km/h), the telescopic boom sensor is normal; If the speed of the device is fast at this time, the sensor of the lower arm may be damaged. The sensor needs to be replaced and debugging.

Debug lower arm sensor

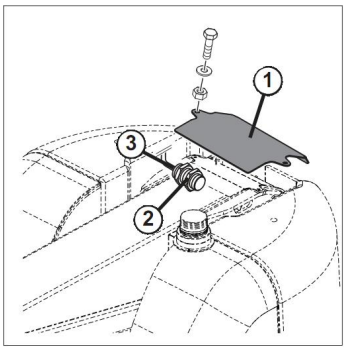

1. Retract the telescopic boom to the bottom.
2. Remove cover plate 1 to protect the sensor, loosen nut 2, and loosen or tighten nut 3 until the light on the sensor is on (orange). The gap between the support and the sensor is about 3mm.

3. Tighten nut 2.

4. Install cover 1.

Check overload sensor

1. Lower the platform to the lowest position.
2. Hoist heavy objects to the bottom plate in the fence and place the heavy objects in the center

   GTHZ120.....230kg

   GTHZ170.....230kg

   GTHZ170C.....260kg
3. Overload alarm, take away 20kg, overload does not alarm, overload sensor is normal.
4. If overload does not alarm, need to re-debug overload sensor. If the sensor is damaged, it needs to be replaced.

Debug overload sensor

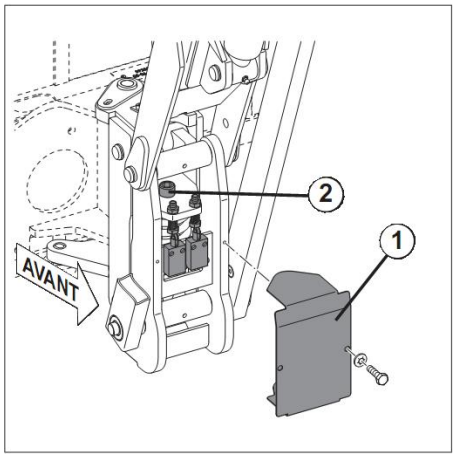

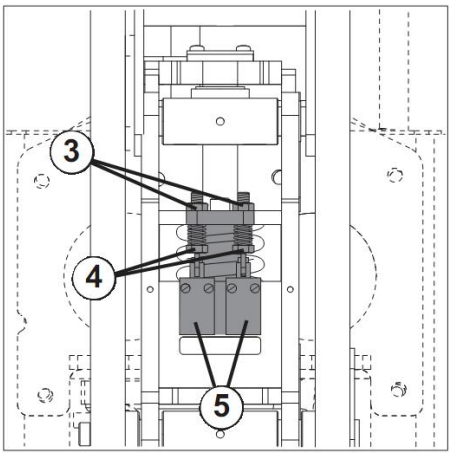

1. Lower the platform to the lowest position.
2. Remove cover 1.
3. Test the performance of the overload spring
4. Center the weight on the baseboard of the fence

   GTHZ120.....230kg

   GTHZ170.....230kg

   GTHZ170C.....260kg
5. Tighten screw 2, but keep minimum clearance and do not hinder rotation
6. Loosen nut 3 and tighten bolt 4 to the maximum extent.
7. Slowly loosen bolt 4, until bolt reaches micro switch 5, just overload alarm.
8. If no alarm is reported after taking away 20kg, overload alarm is reported after adding 20kg weight block, that is, the adjustment is completed.

B-5 Check the oil level in the drive reducer

Improper gear oil level in the drive reducer will reduce the working performance of the machine. If it is continued to be used, it will cause component damage.

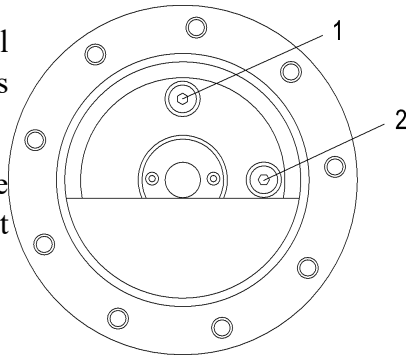

1. Drive the machine to rotate the reducer to the position shown in the figure below, so that one bolt is at the top and the other is at 90 °.
2. Remove No. 2 bolt and check the oil level.
3. The oil level should be flush with the bolt port.
4. If the oil level is lower than the bolt port, add oil.
5. Remove the No. 1 bolt and fill the gear oil from the No. 1 port until the oil level is flush with the No. 2 bolt port.
6. Install the removed bolts.
7. Clean up the gear oil spilled during the inspection.
8. This inspection is required for all driving and deceleration of the machine.

B-6 Check the connecting bolts of slewing support

Regular inspection of the connecting bolts of the slewing support is very important for the normal operation of the machine. After the first 50 hours of operation, the inspection must be carried out every 600 hours. If the bolt is found to fall off or loose during the inspection, it shall be replaced with a new bolt. After applying loctite 272 thread locking compound on the bolt thread, add torque according to the value in the torque table to tighten the bolt. After the bolts are replaced and re torqued, the firmness of the existing bolts shall be rechecked.

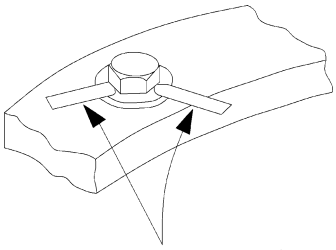

0.04mm(0.0015in)塞规

Figure **5-4**

Check the connecting bolts between the underframe and the slewing support.

1. The folding arm has the largest amplitude; The main boom is horizontal and fully extended.

2.Find the connecting bolts between the underframe and the slewing support.

3. Insert the 0.04mm feeler gauge between the bolt and washer as shown by the arrow in Figure 5-7.

4. Ensure that the plug gauge does not pass through the periphery of the bolt head to the

bolt rod.

5. Turn the turntable until all bolts are checked.

6. Check the connecting bolts between the turntable and the slewing support.

B-7 Periodic lubricate the worm wheel worm reducer

Regular lubrication of the worm gear reducer is crucial to the proper operation of the machine. When the equipment is operated in multiple shifts or exposed to harsh environment, the lubrication frequency and consumption shall be increased accordingly.

1. Raise the lifting arm and place a wedge on the lifting cylinder, then slowly lower the lifting arm onto the cylinder wedge.

Be aware of the extrusion hazards. When bending the arm, do not approach the lifting cylinder and all moving parts.

2. Point the nozzle of the butter gun at the middle of the turntable.
3. Spray the butter on the tooth surface, and then turn the turntable at a certain Angle, repeat the above action, until the whole rotary support one circle is coated with butter.

In the rotary support bearing position, do not apply too much butter. Too much butter will squeeze back the sealing ring outside.

4. Remove the safety wedge and lower the lift arm to the closing position.。
5. Point the nozzle of the butter gun at the drive chamber of the worm gear reducer.
6. Butter was injected until it spilled.
7. Lubricate the exposed rotary support wheel teeth.

Lubrication of the rotary support			
Lubrication	butter mouths	**capacity**	quoties
lubricant	multipurpose grease	**lubrication interval**	For 3 months or run for 150 hours
Lubrication of rotary support of external gear			
Lubrication	external gear	**capacity**	quoties
lubricant	Open-type gear lubricating grease	**lubrication interval**	Each month or run for 50 hours
Lubrication of the worm gear reducer			
Lubrication	butter mouths	**capacity**	quoties
lubricant	multipurpose grease	**lubrication interval**	每年或运行 1000 小时

B-8 Check the Platform offset

Platform offset

Measure the offset from the platform to the ground. Fully extend the main boom under the rated load of the platform and the power off state. The maximum allowable deviation within 10 minutes is 50mm (1.97 in). If the machine offset exceeds the maximum allowable value, do the following.

Cylinder offset

Figure 5-13

Cylinder bore size (mm/in)	Maximum allowable offset (within 10 minutes) (mm/in)
32/1.26	3.91/0.154
40/1.57	2.50/0.098
50/1.97	1.60/0.063
55/2.17	1.32/0.052
80/3.15	0.63/0.025

- Measure the offset at the cylinder piston rod with a calibrated dial indicator.
- The oil in the cylinder must be at ambient temperature and the temperature must be stable.
- The cylinder must have normal load and be the normal platform load applied by the platform.
- If the cylinder passes this test, it is acceptable.

Note: this information is based on a cylinder leak of 6 drops per minute. Due to the physical characteristics of thermal expansion and cold contraction of hydraulic oil, the test offset may have an error of 7 / 10000.

B-9 Check the wires

The maintenance of electrical equipment is very important to the normal and safe operation of the machine. Allowing the machine to continue to operate in a damaged and corrosive environment may lead to unsafe operation or serious injury. Replace or repair damaged or corroded wires before operation.

Electric shock

Before checking the wires, be sure to disconnect the battery on the machine and the charger on the AC power socket. Contact with live wires may cause death or serious injury.

1. Check whether the wires in the following areas are damaged or corroded:

- Rotary table valve group harness
- Ground controller junction box
- Platform controller junction box
- Drag chain system harness

2. Check all movable connectors to ensure that they are not loose and the sensor lines are not damaged.

B-10 Check the battery

Good battery condition is essential for good machine performance and safe operation. Improper electrolyte level or damaged cables and wiring may cause component damage and dangerous situations.

Attention
Always wear protective gloves for inspection.

Electric shock

Contact with live circuits may result in death or serious injury.
Remove all rings, watches and other accessories.

Danger of physical injury

The battery contains acidic substances, which should be prevented from leakage and contact.
If the acid in the battery leaks, use soda water and the leaked acid.

Attention
After the battery is fully charged, wear protective gloves for inspection. Ensure that the battery cable connections are not corroded

Note: add terminal protectors and anti-corrosion sealants to help eliminate corrosion of battery terminals and cables.

Note: make sure the battery is fully charged before testing.

Check lead-acid battery

- wear protective clothing and glasses.
- ensure that the battery cable connections are not corroded
- ensure that the battery is firmly installed and the cable connection is tight
- open the exhaust covers of two groups of batteries and check the density of electrolyte of each group of batteries with a liquid densimeter.

Result: if the electrolyte density of any battery is less than 1.026, the battery must be replaced.

- check the electrolyte level. If necessary, make up distilled water from the water inlet on the top of the battery. Be careful not to spill.
- install the battery ventilation cover.
- check the battery line connection to ensure that the connection is accurate (red is connected to the positive pole and black is connected to the negative pole).
- connect the charging plug to the 220V socket.

result: the battery can be charged normally and the charging indicator light is on.

B-11 Test travel speed

1. Turn the "ground / platform control switch" of the turntable control box to the right to the "platform control position".
2. Turn the "emergency stop switch" button on the turntable control box and platform control box to the "on" position.
3. Press the walk button 24.
4. Hold the enable switch on the front of the control Handle on the platform control box and slowly push the Control handle forward to the full drive position.
5. The test results are shown in Table 5-5.

Table 5-5

Model	Test result
GTHZ120 **GTHZ170** **GTHZ170C**	When the boom is not in working condition, the maximum driving speed is 6km/h, and when the boom is in working condition, the maximum driving speed is 0.6km/h.

Attention
If the running speed of the machine is higher than the test results in the above table, stop using it immediately and mark it.

B-12Check the emergency descent function

When the motor power device fails, the manual pump can be used as the power source according to the actual situation. According to the emergency operation, the boom can be controlled to perform the corresponding action by flipping the relevant action switch at the same time.

Attention
The "emergency power unit switch" is only used for a short time (lowering the work bar into place from the maximum angle and maximum length position) when the engine / electric cannot work.

1. Open the right cover
2. Evacuate personnel under the fence
3. When you need the car to do the action, you need to press the tool into the corresponding solenoid valve (Figure B).
4. Simultaneously shake the hand pump up and down (Figure D).

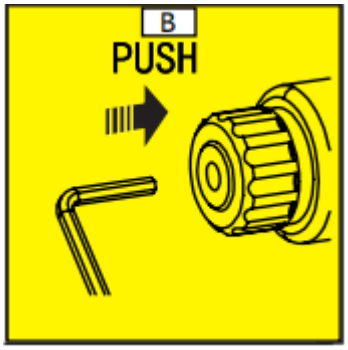

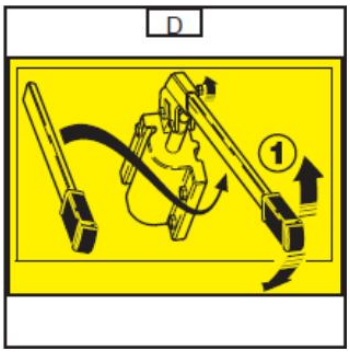

Attention
In the operation of emergency descent, the priority is to make the telescopic arm retract, and the last is to make the upper arm descend.

The corresponding functions of each solenoid valve are as follows:

GTHZ120

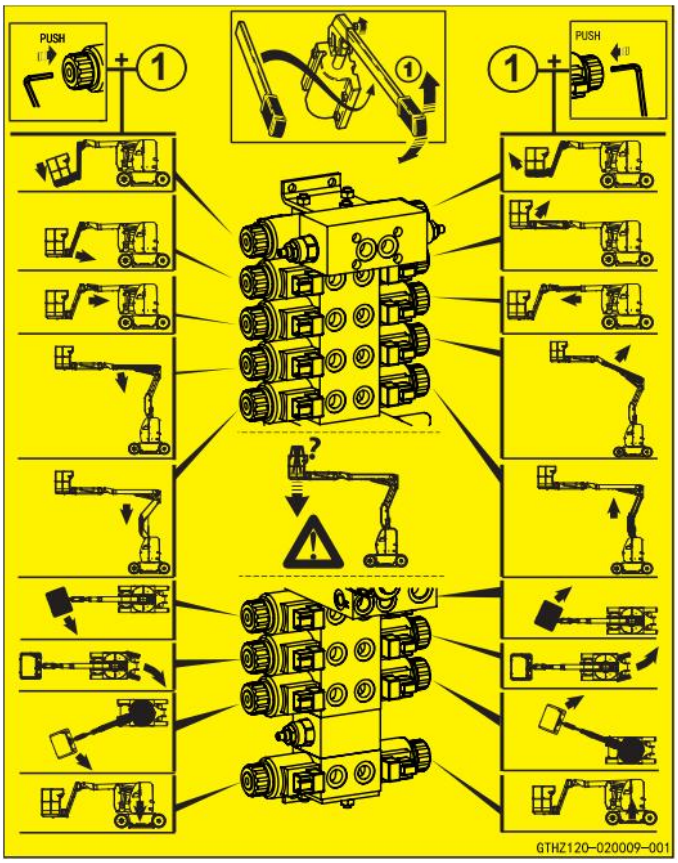

GTHZ170-GTHZ170C

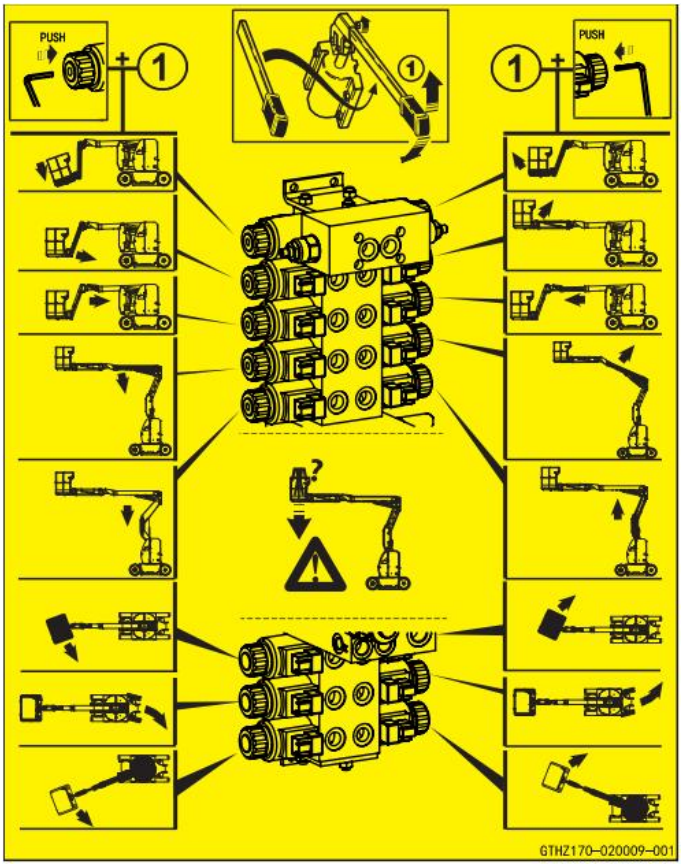

Emergency rotation(Worm gear reducer)：

When the platform is located above a structure or an obstacle in case of main power failure, manually turn the booms and rotation assembly after unlocking. Perform the following steps to manually unlock it:

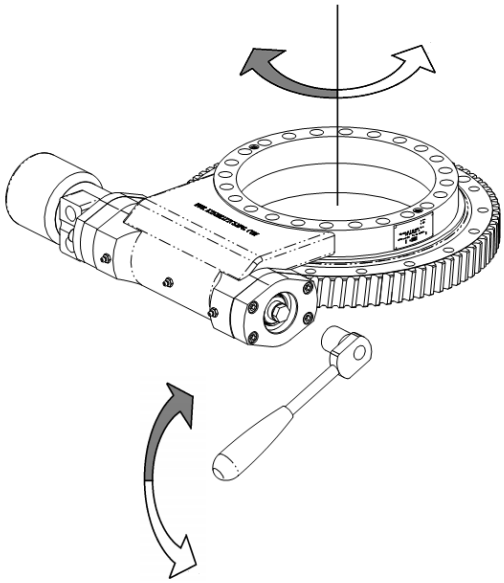

1. Use 21mm sleeve and ratchet wrench to position the sleeve on the rotating worm gear of the machine.
2. Put the wrench on the sleeve and pull it in the corresponding direction.

Attention
Before operating the emergency rotation, evacuate the surrounding people to avoid injuries caused by the rotation of the turret. At the same time, ensure that there is enough space to prevent the equipment from encountering obstacles during rotation. During rotation, observe whether there is enough space between rotating parts and walls.

B-13 Check the tilt protection system

Turn the "ground / platform control switch" of the turntable control box to the left to the "ground control position.

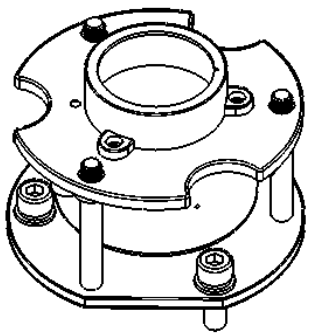

1. Turn the "emergency stop switch" button on the turntable control box to the "on" position.
2. When the machine is in the non-working

state, pull the horizontal switch for more than 3 ° in the X (left and right) / Y (front and rear) direction.

3. At this time, there is a tilt alarm, "non horizontal indicator" flashes, and all actions are not limited.
4. When the machine is in the working state, pull the horizontal switch for more than 3 ° in the X (left and right) / Y (front and rear) direction.
5. At this time, the tilt alarm appears, and the "non horizontal indicator" flashes, limiting some actions, allowing the boom to retract and lower luffing
6. When the machine is in the non working state, put these two pieces of wood under the two wheels in front (or behind) of the machine, and then drive the machine onto these two pieces of wood. Size of wood block (length) × wide × Height:

   650×220×90mm ————-GTHZ120/GTHZ170

   750×250×110mm————-GTHZ170C
7. At this time, there is a tilt alarm, "non horizontal indicator" flashes, and all actions are not limited.
8. Drive the machine down and remove the wood block
9. When the machine is in the working state, put these two pieces of wood under the two wheels in front (or behind) of the machine, and then drive the machine onto these two pieces of wood. Size of wood block (length) × wide × Height:

   650×220×90mm ————-GTHZ120/GTHZ170

   750×250×110mm————-GTHZ170C
10. At this time, the tilt alarm appears, and the "non horizontal indicator" flashes, limiting some actions, allowing the boom to retract and lower luffing, and allowing the turntable to rotate slowly
11. After the boom is retracted, lower the luffing. After the machine is in non working state, drive down and remove the wood block.

5.3.3 Inspection procedure C

C-1 Replace the gear oil in the drive reducer

Regularly changing the gear oil in the drive reducer is very important to improve the working performance of the machine and prolong the service life of the reducer.

1. Drive the machine to rotate the reducer to the position shown in the figure below so that one bolt is at the bottom.
2. Place a suitable container under the bolt indicated by the arrow in the figure.
3. Remove the bolt indicated by the arrow in the figure.

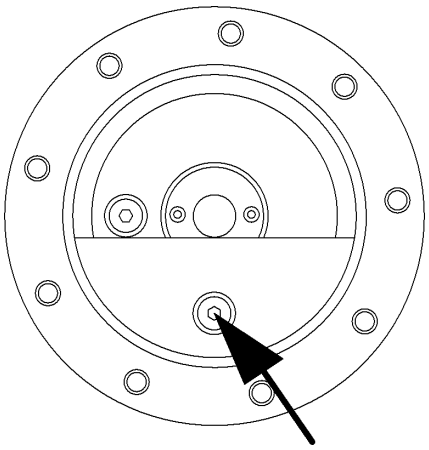

4. Until all the gear oil in the drive reducer flows out into the designated container.
5. Install the removed bolts.
6. Drive the machine to rotate the reducer to the position shown in the figure below, so that one bolt is at the top and the other is at 90 °.

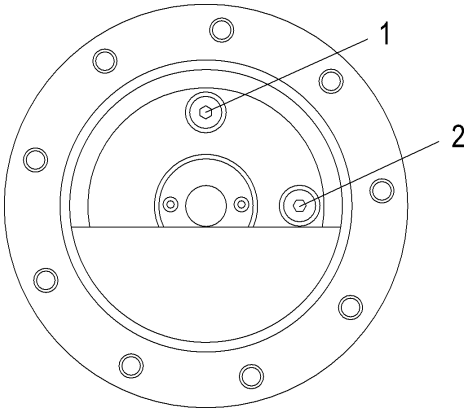

7. Remove bolts 1 and 2.
8. Add new gear oil from No. 1 port until the oil level is flush with No. 2 bolt port.
9. Install the removed bolts.
10. Clean up the gear oil spilled during the inspection.
11. This inspection is required for all driving and deceleration of the machine.

C-2 Lubricate the worm wheel and worm gear reducer

Regular lubrication of the worm worm reducer is crucial to improve the working performance of the machine and prolong the service life of the reducer.

1. See the reference arrow to find the grease filling point.
2. Clean the grease filling point.
3. Target the filling point with the butter gun and turn the rotary device to inject grease into the nozzle. The refueling amount of each lubrication part is shown in the following table.

Fuel quantity of the lubrication part	The refueling point	Grease maintenance and fuel volume
Roller grease filling point	1	18g
Cochlear rod cavity	1	325g
Bearing grease filling point	2	40g

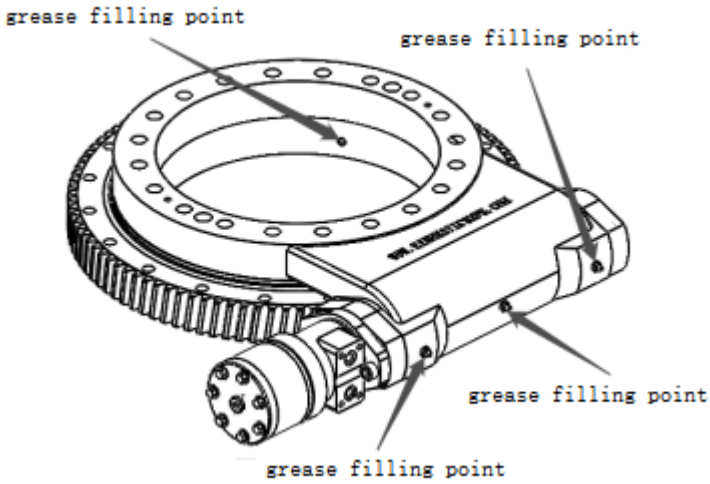

C-3 Change hydraulic oil

Regular replacement of hydraulic oil is very important for the normal operation of the machine and prolonging its service life. Hydraulic oil with unqualified cleanliness may cause abnormal operation of the machine, and continued use may cause damage to hydraulic parts. Particularly harsh working environment requires frequent replacement of hydraulic oil.

Burn Hazard

Allow the hydraulic oil to cool to room temperature before servicing the hydraulic system.

Attention

The inspection must be carried out with the machine switched off.

When removing the rubber hose and pipe joint, the O-ring on the rubber hose and

pipe joint must be replaced.

1. Open the cover on the left side of the turntable and find the hydraulic oil tank.
2. Remove the oil drain plug at the bottom of the oil tank and drain all the oil into a suitable container. See the product performance parameters for the volume of the hydraulic oil tank.
3. Disconnect and plug the oil suction pipe.
4. Disconnect and plug the oil return pipe.
5. Remove the hydraulic oil tank from the machine after removing the fastening bolts of the hydraulic oil tank.
6. Clean the inside of the oil tank with neutral solvent and dry the hydraulic oil tank.

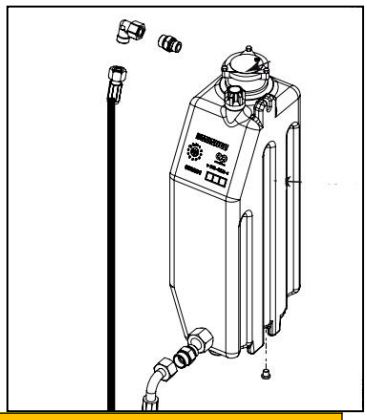

High pressure hazard

Slowly remove the hydraulic components to reduce the hydraulic oil pressure. High hydraulic oil pressure may penetrate the skin. If you are injured, please see a doctor immediately.

7. Install the hydraulic oil tank on the machine
8. Connect the oil suction and return lines to the hydraulic tank.

C-4 Replace the hydraulic oil tank suction filter

Regular replacement of the oil suction filter of the hydraulic oil tank is very important for the normal operation of the machine and prolonging its service life. The hydraulic oil with unqualified cleanliness may cause abnormal operation of the machine, and continued use may cause damage to hydraulic parts. Particularly harsh working environment requires frequent replacement of hydraulic oil.

When changing the hydraulic oil, replace the oil suction filter of the hydraulic oil tank.

C-5 Check the boom slider

Regular inspection of the boom slider is very important for the safe operation of the machine. Each sliding block forms a friction pair with the surface of the telescopic arm. Improper sliding block gasket or continuous use of the old sliding block may lead to component damage and unsafe operation.

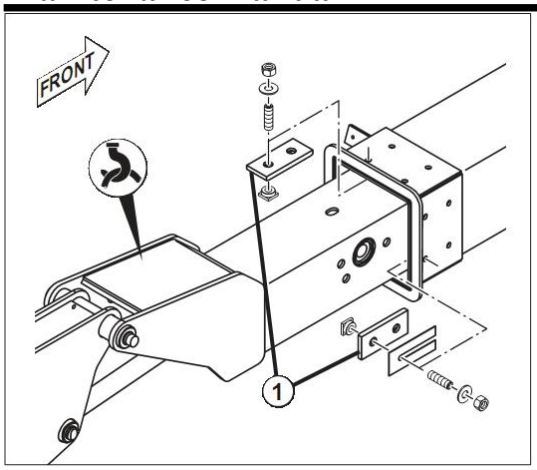

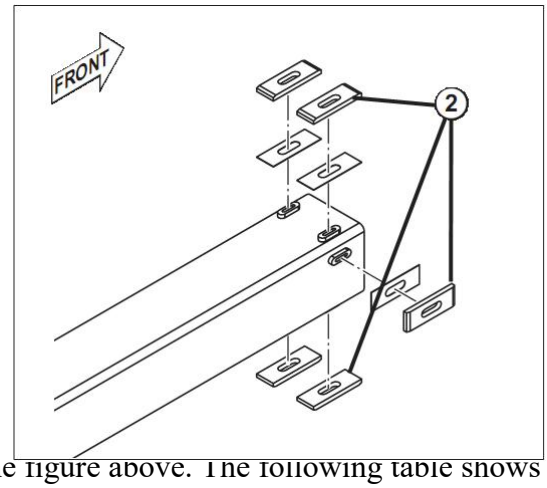

1. Measure the thickness of each slider in the figure above. The following table shows the specified thickness of each slider.

Serial number	Slider thickness
1	12mm
2	12mm

2. When the wear of the slider is greater than or equal to 2mm, the slider assembly needs to be replaced in time.

Attention
The removed slider cannot be reused and must be replaced with a new slider assembly.

Chapter 6 Maintenance procedures

- Maintenance procedures must be carried out by professionally trained and qualified personnel.
- Replace or repair damaged parts immediately. Do not operate the machine with damaged parts.
- Before operating the machine, properly maintain the machine.

- Before starting the machine:
  - read, understand and follow the safety rules and operating instructions in the operation manual.
  - read all procedures and rules.
  - unless otherwise specified, the maintenance procedures of this machine should be carried out under the following circumstances.
  - Place the machine on a flat, level, firm ground.

Control function authorization system

The platform control system of the machine uses time-dependent support circuits to limit the time availability of active or enabled controllers. When an action control switch on the panel is toggled, the controller is enabled and the operator can operate the action within 30 seconds. The controller will remain enabled as long as the operator continues to use it or switch other actions for other operations, and it will also remain enabled for 30 seconds after the last operation. When the controller is active, the working light on the platform display panel for the corresponding action will be lit. After the specified time, the working light will be turned off, and the controller will be turned off or disabled. To continue using the device, you must restart the controller to start the timing system again.

Transport position sensing system

The transportation position sensing system is realized by the proximity sensors installed at the telescopic boom, the upper and lower arms and the micro switch (GTHZ120) at the anti-roll mechanism. When there is a proximity sensor off or the micro switch is opened, it is judged to be in the working state, otherwise it is not in the working state. The position of the forearm was not considered.

The system is used to control the following systems: walking deceleration system.

Walking deceleration system

When the boom is in working condition, the driving speed is automatically limited to low speed.

6.1 Disassembly and Installation of Components

6.1.1 Tires and rims

1. Tire and rim replacement Hangcha Group Co., Ltd. recommends using tires with the same size, grade and brand as the original tires of the machine for replacement. For the tire part number of a specific machine model, please

refer to the parts manual of the corresponding machine. If the replacement tire recommended by Hangcha Group Co., Ltd. is not used, the replaced tire shall have the following characteristics:

2. The grade / rated load and size are equal to or better than the original tires.
3. The tread grounding width is equal to or better than the original tire.
4. The wheel diameter, width and compensation size are equal to the original tires.
5. The tire manufacturer allows such applications (including application range, application occasion, maximum speed and maximum tire load, etc.).
6. Due to the size difference between tires of different brands, two tires on the same axle should use the same brand.
7.

Unsafe operation hazard

The tires and rims on the machine are strictly designed and selected according to the requirements of the overall performance and load stability of the machine, so their model and specification, rim width, installation center surface and diameter shall not be changed, otherwise it will lead to serious danger of operation instability.

Tire and rim installation

It is very important that the bolt pre tightening torque of the rim meets the requirements.

Unsafe operation hazard

- Special tire nuts matching with rim bolts must be used. The nuts must meet the pre tightening torque requirements, and anti-loosening measures must be taken to prevent the risk of rim looseness, bolt fracture and tire separation from the axle. Always use only nuts that match the wheel cone angle.
- Tighten the nut to the appropriate torque to prevent the wheel from loosening. Use a torque wrench to tighten the fasteners. If you do not have a torque wrench, use a socket wrench to tighten the fastener, and then immediately ask the service station or dealer to tighten the nut to the correct torque. Over tightening will cause the bolt to break or permanently deform the bolt hole on the wheel.

The correct steps for tightening tire nuts are as follows:

1. Apply loctite 272 on the bolts and nuts first, and then screw on all nuts by hand to prevent disordered threads. Do not use lubricant on threads or nuts.
2. Tighten the nuts in the sequence shown below

3. The fastening of nuts shall be carried out step by step. Refer to the recommended torque in the following table and tighten the nuts in the recommended sequence.

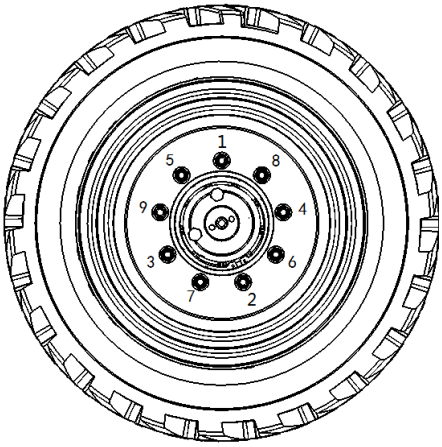

MODEL		Step1	Step 2
GTHZ120 GTHZ170	front wheel	150N.m	250N.m
	rear wheel	100N.m	200N.m
GTHZ170C	front wheel	150N.m	250N.m
	rear wheel	150N.m	250N.m

Attention
Tire nuts should be tightened before first use and after each tire is removed. Check and adjust the torque every 3 months or 150 hours of operation.

6.1.2 Walking Reducer and Motor

Disassembly of Walking Reducer and Motor

1. Place the machine on a firm, level ground.
2. Place the jack with sufficient capacity on the side to be removed under the chassis of the machine. Lift the jack to lift the wheel off the ground.
3. Remove the tire nut used to secure the wheel to the reducer. Remove wheel using appropriate lifting equipment.
4. Remove the rear cover.
5. Mark and disconnect the wire connected to the motor.
6. Remove the bolts and washers that fix the walking reducer and the frame, remove the walking reducer together with the walking motor and lift it from the bottom frame, and place it smoothly.
7. Remove the bolts and washers securing the traveling reducer and the motor.
8. Carefully remove the walking motor and turn it away.

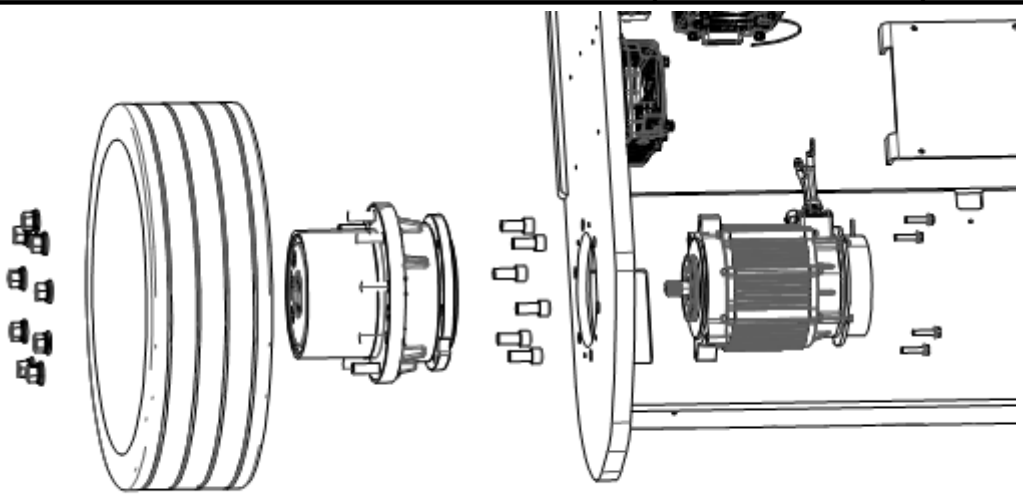

Installation of walking reducer and motor

1. Use lifting equipment with sufficient capacity to support the outriggers.
2. Clean the installation surface, lift the walking reducer, and fit the reducer with the flange installation surface on the good frame.
3. Lift the walking motor, engage the drive shaft of the motor with the walking reducer, and then fit with the flange mounting surface of the frame.
4. Apply Loctite 272 thread glue and install bolts and washers one by one.
5. Tighten the bolts with a torque wrench.
6. When installing the wheel, pay attention to the orientation of the tire.
7. Install the tire nuts in turn (refer to6.1.1）.
8. Connect the wires on the motor.
9. Check the gear oil in the reducer and add gear oil if necessary (refer to inspection procedure C-1)

6.1.3 Battery

Attention
Before removing the battery, the power supply of the charger and the working power supply of the whole machine must be cut off.

The batteries are located on both sides of the frame.

1. Open the turntable cover and find the battery.
2. Mark and disconnect the wire connected to the battery
3. Remove the bolts that secure the battery.
4. With the help of hoisting equipment, remove the battery.

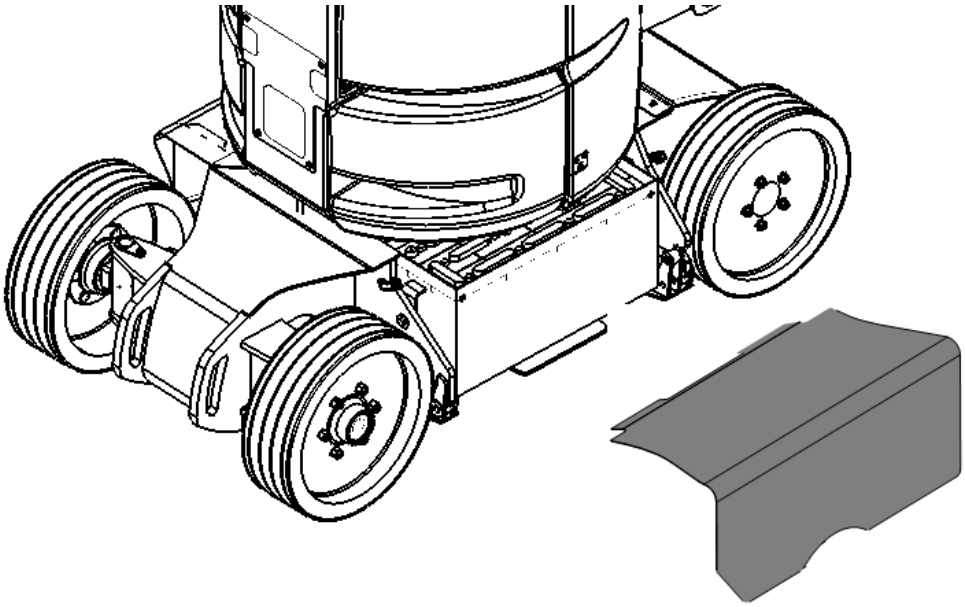

6.2 Hydraulic System

6.2.1 Hydraulic Schematic Diagram

GTHZ120

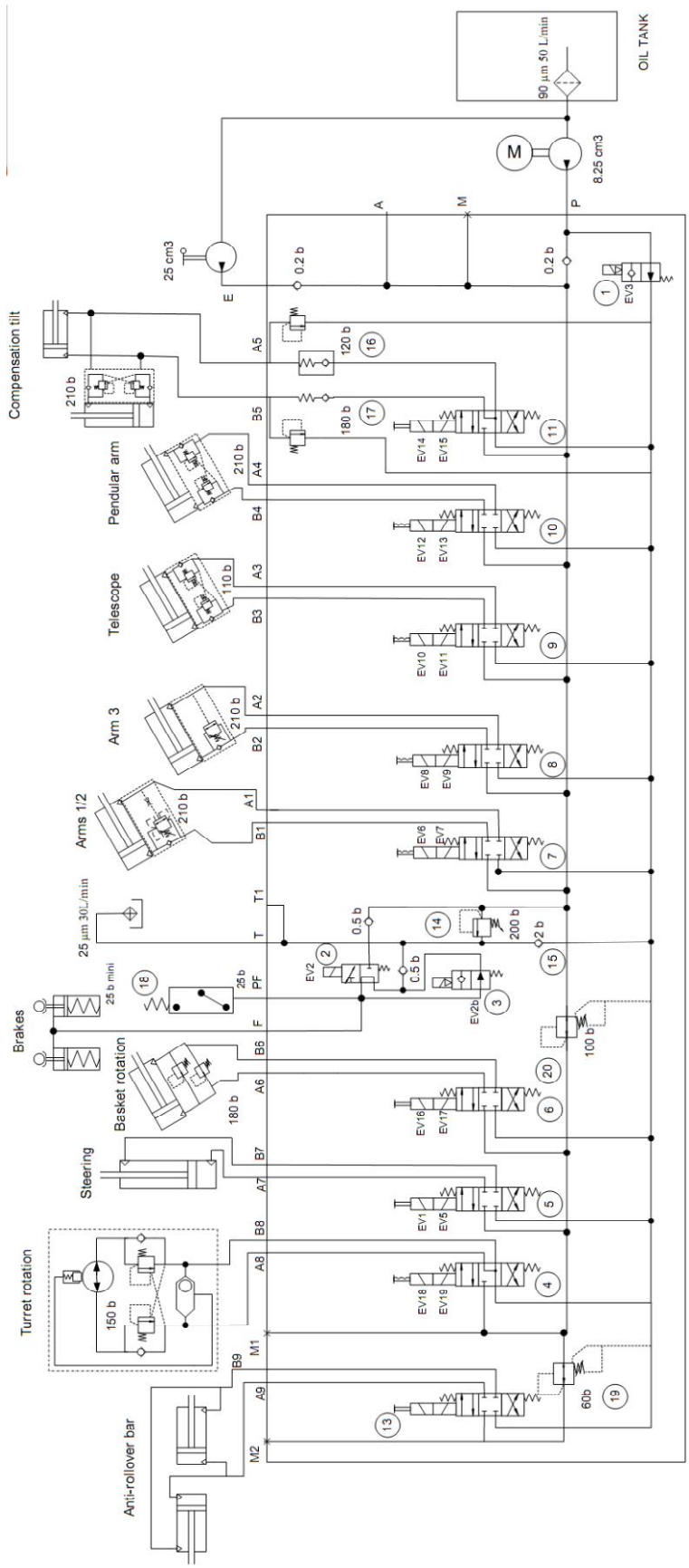

GTHZ170-GTHZ170C

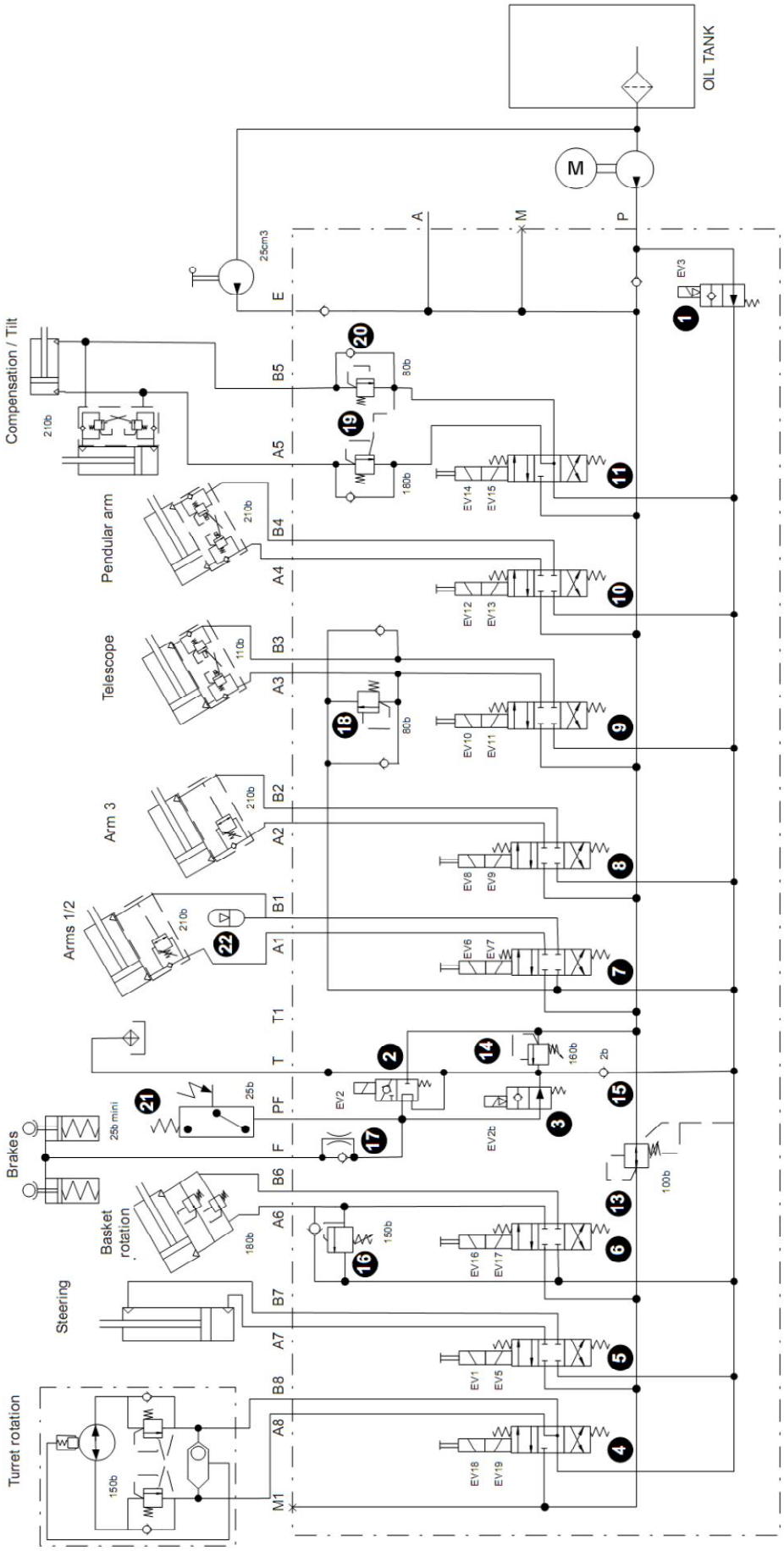

6.2.2 Hydraulic Component Location Diagram

GTHZ120

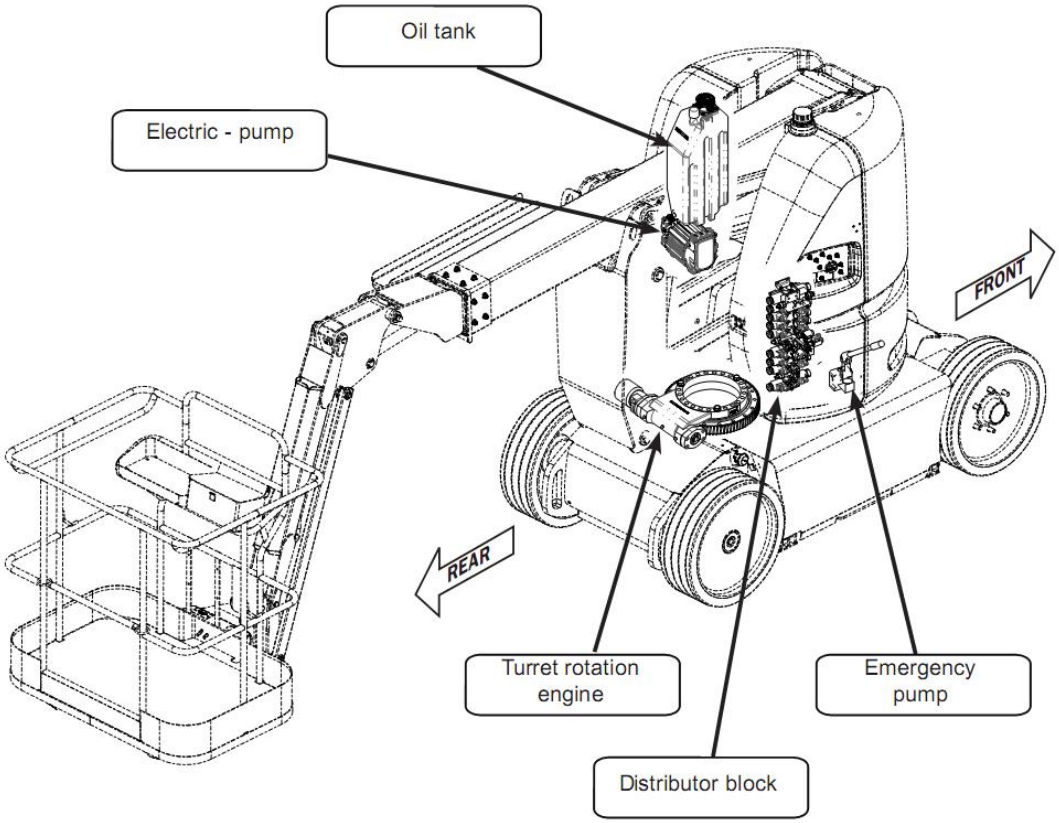

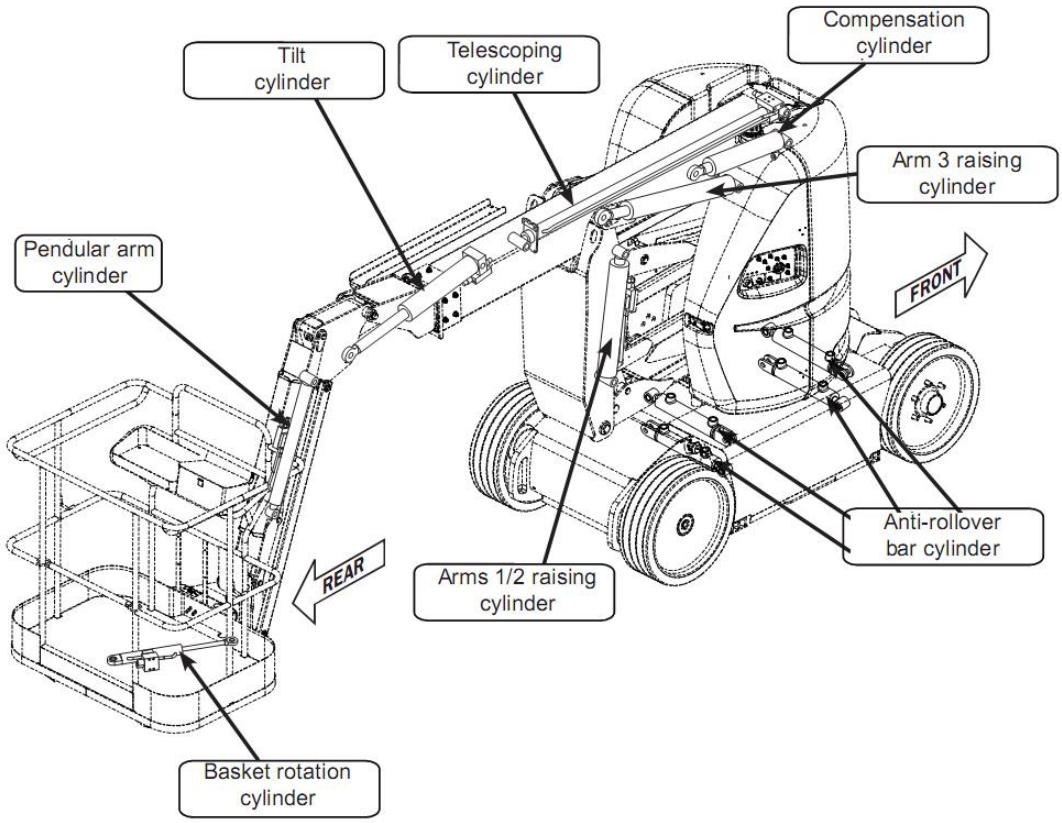

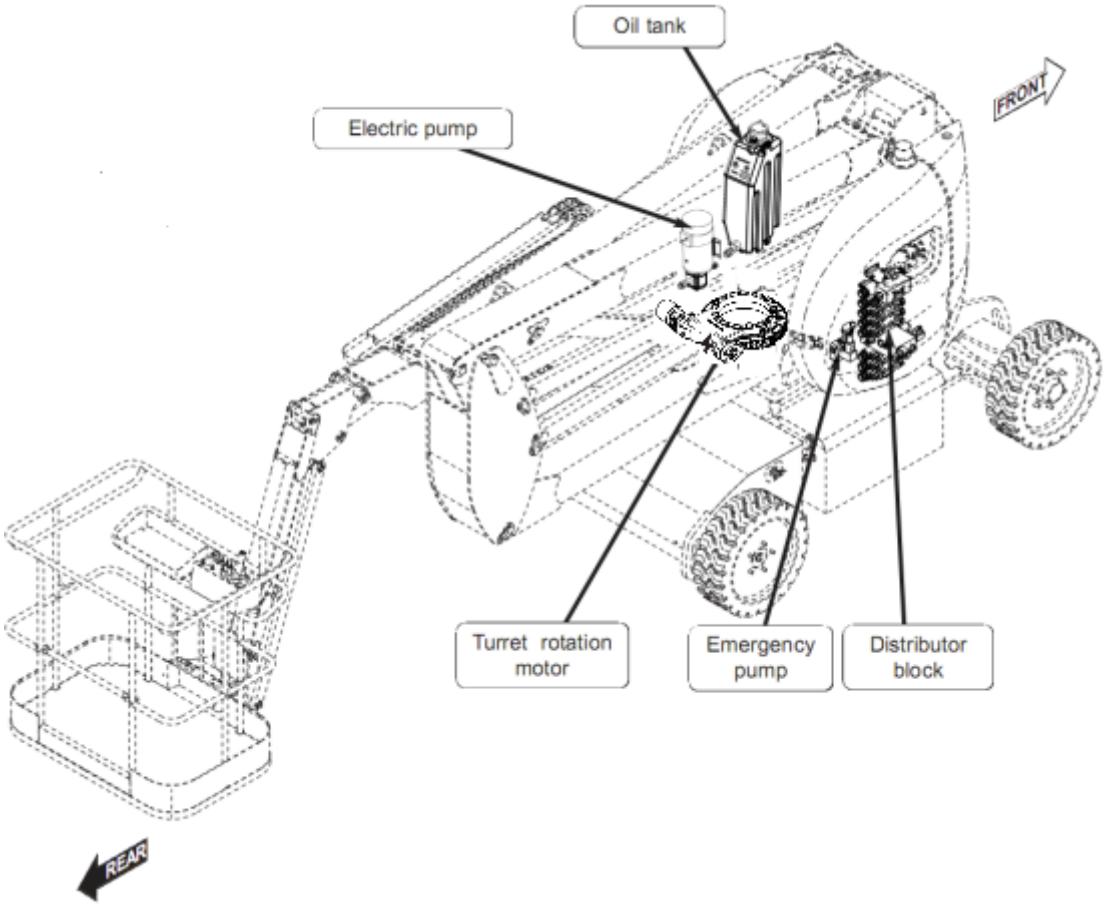
Oil tank
Electric pump
FRONT
Turret rotation motor
Emergency pump
Distributor block
REAR

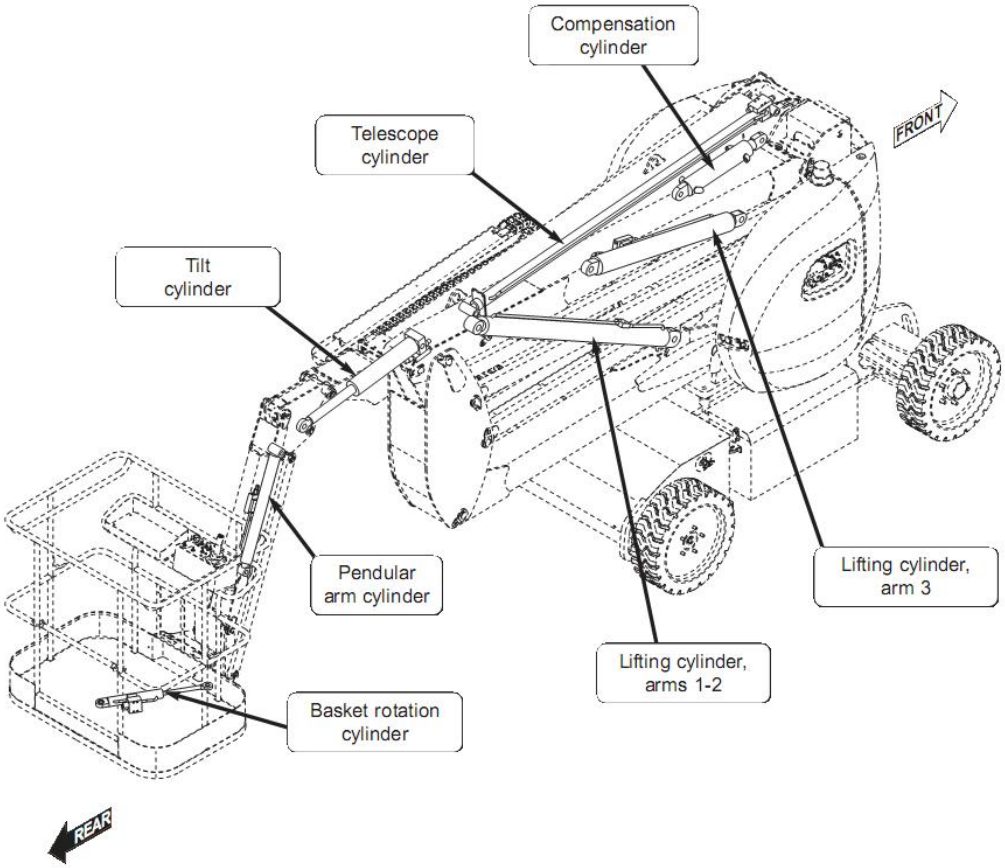
Compensation cylinder
Telescope cylinder
FRONT
Tilt cylinder
Pendular arm cylinder
Lifting cylinder, arm 3
Lifting cylinder, arms 1-2
Basket rotation cylinder
REAR

6.2.3 Debug Pressure

Attention
In this section, unless otherwise indicated, please follow the hydraulic system drawing to determine each pressure and select the appropriate gauge.

A-Adjust the pressure of the main oil line

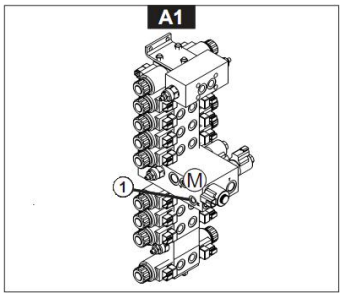

Calibrate the main pressure limiting valve pressure (Hydraulic schematic diagram No.14)

1. Connect a pressure gauge to port M on the main valve block (A1-1).
2. Place the platform under no pressure.
3. Lower the first and second arm until the cylinder touches the pad.
4. Check whether the measured data is consistent with the drawing.

B-Adjust the pressure of the fence rotation oil circuit

Calibrate pressure limiting valve pressure (Hydraulic schematic diagram No.13)

1. Connect one pressure gauge to M of main valve block (A1-1)
2. Place the platform under no pressure
3. Steer and hold until cylinder touches pad
4. Check whether the value is consistent with the requirements on the drawing.

C-Debug manual release of oil line pressure

1. Connect a T-splitter connector at outlet F (C1-1) and then connect a pressure gauge (C1-2).
2. Place the platform under no pressure.
3. Operate the platform to walk and check whether it conforms to the graph (C2).
4. If the pressure at the pressure switch (C3-1) is less than the critical point in graph C2, the platform stops walking and tighten the screw at the pressure switch.
5. If the pressure at the pressure switch (C3-1) is greater than the critical point in graph C2, loosen the adjusting bolt for a few turns. The pressure is generally adjusted by adjusting the tightness of the bolt.
6. Re-operate the platform to walk.

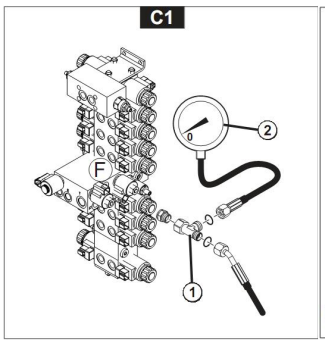

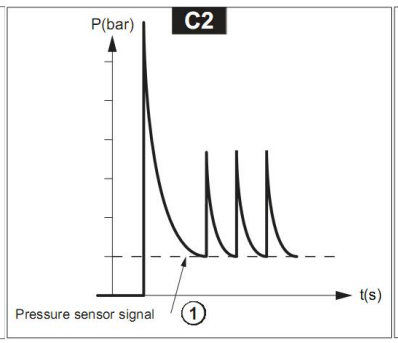

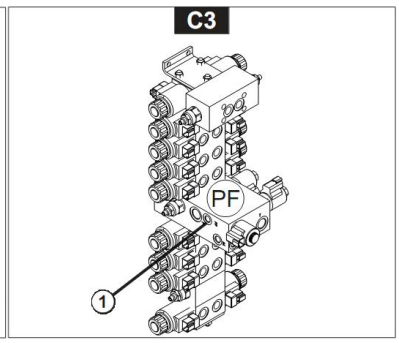

E- Adjust the pressure of the tilt/compensation cylinder line

1. Decompress the compensation/tilt oil line
2. Close the oil circuit

Adjust the pressure of valve block No.19(Hydraulic schematic)

3. Install a tee connector at outlet A5 (E1-1) and connect a pressure gauge (E1-2).
4. Open the oil circuit
5. According to the steps 1, 2, and 3 (E3 - E4 and E5): calibrate and adjust the pressure of the valve block while moving E5

Debug valve block No.20 pressure (Hydraulic schematic)

6. Attach a tee connector to outlet B5 (E6-1) and connect a pressure gauge (E6-2).
7. Start the oil circuit
8. According to steps 8 and 9 (E8 and E9): Calibrate and adjust the pressure of the valve block while moving E9.

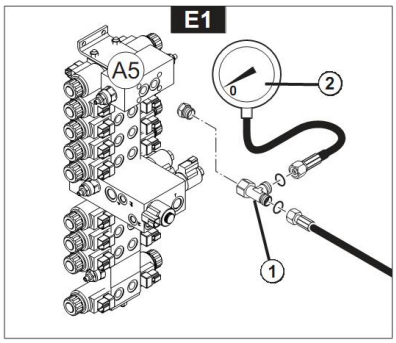

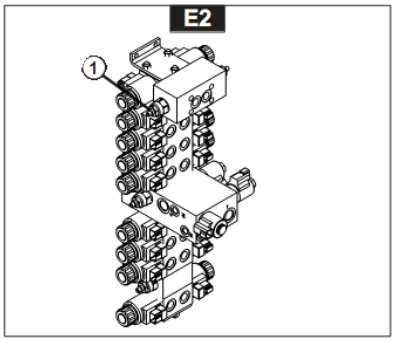

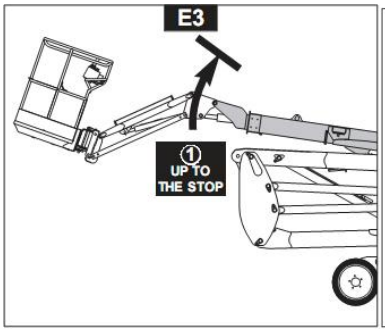

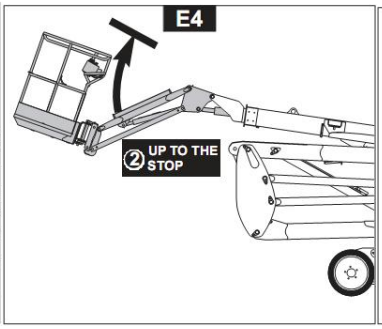

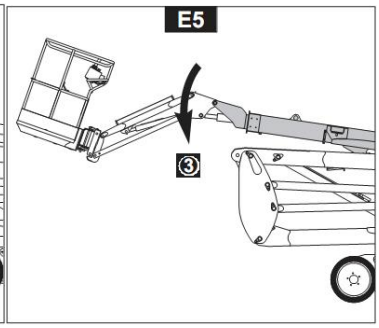

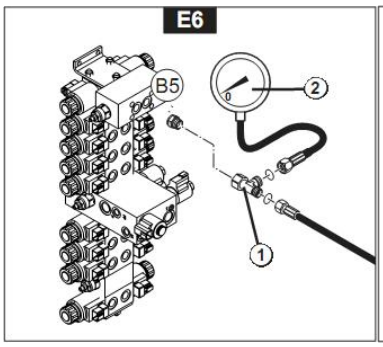

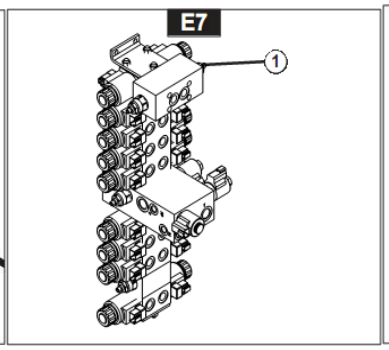

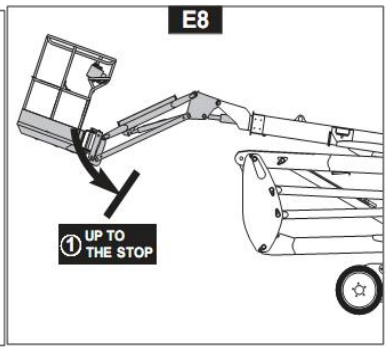

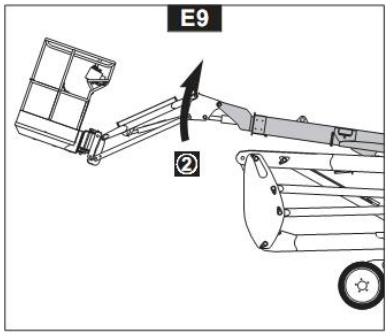

F- Compensate/tilt oil circuit - solve the problem

When the platform is not working, if the fence does not stop in the air but falls due to gravity, then follow these steps:

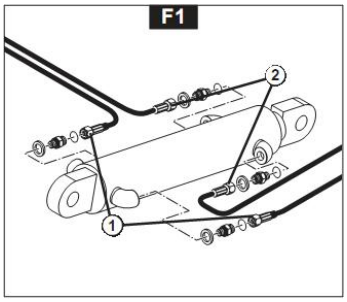

Test steps

1. Relieve pressure on the compensated/inclined oil line.
2. Place a recycling bin under the compensation cylinder.
3. Remove the rubber hose (F1-1) connected to the oil circuit of the compensation cylinder.
4. Connect a straight connector to the rubber hose of the bottom cylinder.
5. Remove the rubber hose (F2-1) connecting A5 and B5 of the main valve block.
6. Install a tee connector (F2-2) between the main valve block and the rubber hose.
7. Connect a 0 to 20MPa pressure gauge (F2-3) at A5.
8. Connect a 0 to 10MPa pressure gauge (F2-4) at position B5.

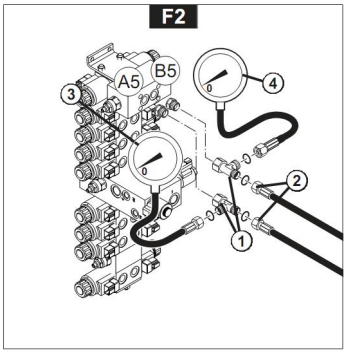

Place the platform under pressure

9. First, do some tilting actions by the bottom control to make the hydraulic oil circuit pressure.
10. Adjust the fence to a horizontal position.

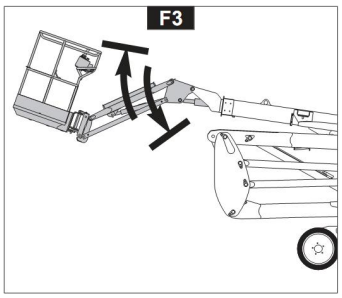

Place the platform in a pressure-free state

11. Record the data on the pressure gauge
12. Check the fence for slippage

Note: This process may take a while (several hours)

Analysis results

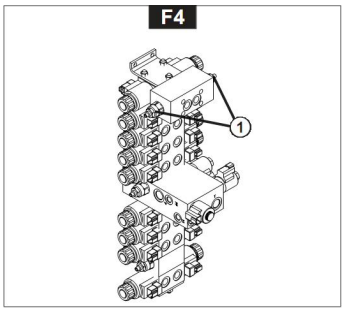

- ➢ Fencing does not move, pressure does not drop: cylinder or compensation cylinder seal ring is damaged.
  - Remove the cylinder and check the condition of the seal ring: if necessary, replace it.
  - Check the cylinder for leakage: replace it if there is dirt rust, etc.
- ➢ If the fence does not move, there are one or two oil routes whose pressure drops quickly: one or two of the interface seals in the main valve block have problems or need to be adjusted.
  - Decompresses the compensated/tilting oil pipeline
  - Remove the relevant valve block (F5-7 and/or F6-8), inspect the appearance, and replace the block if the seal is damaged.
  - Reinstall the block and check for normal
- ➢ If the fence decreases, the pressure on the two pressure gauges remains balanced (+/-1MPa) or the value of oil circuit A5 remains unchanged and the value of B5 decreases:

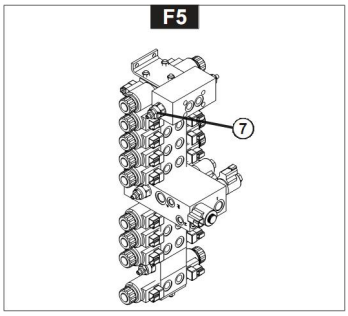

- Decompresses the compensated/tilting oil pipeline.

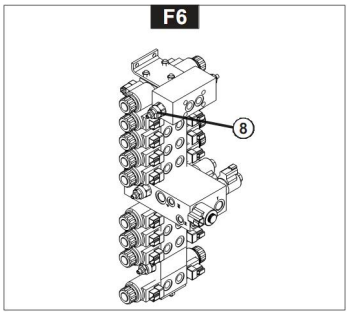

- Remove the cylinder and check the condition of the seal ring: if necessary, replace it.
- Check the cylinder for leakage: replace it if there is dirt, rust, etc.
-

6.3 Electrical System

6.3.1 Electrical Schematic Diagram

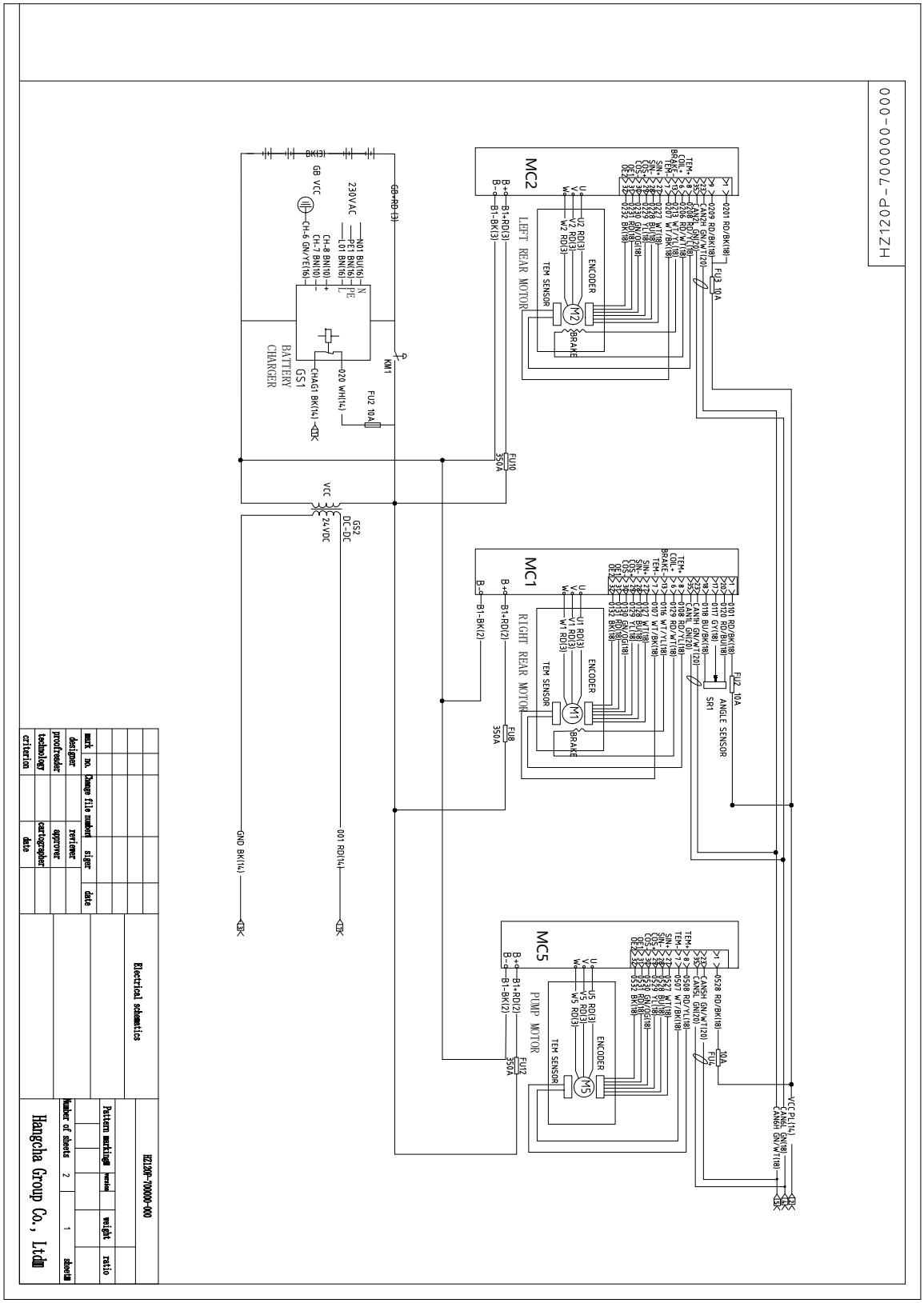

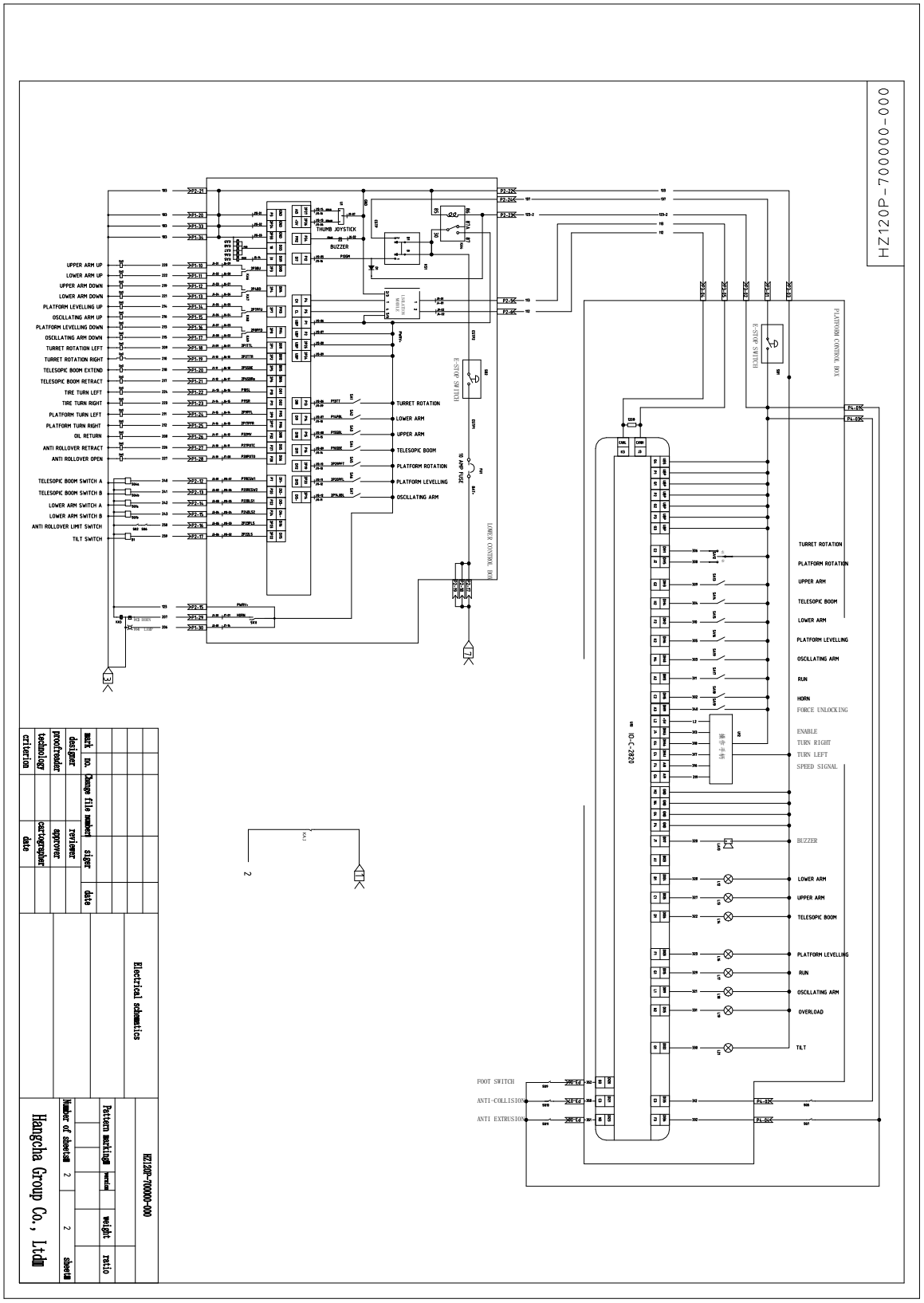
HZ120P-700000-000
UPPER ARM UP
LOWER ARM UP
UPPER ARM DOWN
LOWER ARM DOWN
PLATFORM LEVELLING UP
OSCILLATING ARM UP
PLATFORM LEVELLING DOWN
OSCILLATING ARM DOWN
TURRET ROTATION LEFT
TURRET ROTATION RIGHT
TELESOPIC BOOM EXTEND
TELESOPIC BOOM RETRACT
TIRE TURN LEFT
TIRE TURN RIGHT
PLATFORM TURN LEFT
PLATFORM TURN RIGHT
OIL RETURN
ANTI ROLLOVER RETRACT
ANTI ROLLOVER OPEN
TELESOPIC BOOM SWITCH A
TELESOPIC BOOM SWITCH B
LOWER ARM SWITCH A
LOWER ARM SWITCH B
ANTI ROLLOVER LIMIT SWITCH
TILT SWITCH
THUMB JOYSTICK
BUZZER
E-STOP SWITCH
10 AMP FUSE
TURRET ROTATION
LOWER ARM
UPPER ARM
TELESOPIC BOOM
PLATFORM ROTATION
PLATFORM LEVELLING
OSCILLATING ARM
LARGE CONTROL BOX
PLATFORM CONTROL BOX
TURRET ROTATION
PLATFORM ROTATION
UPPER ARM
TELESOPIC BOOM
LOWER ARM
PLATFORM LEVELLING
OSCILLATING ARM
RUN
HORN
FORCE UNLOCKING
ENABLE
TURN RIGHT
TURN LEFT
SPEED SIGNAL
BUZZER
LOWER ARM
UPPER ARM
TELESOPIC BOOM
PLATFORM LEVELLING
RUN
OSCILLATING ARM
OVERLOAD
TILT
FOOT SWITCH
ANTI-COLLISION
ANTI EXTRUSION
Electrical schematics
Hangcha Group Co., Ltd
HZ120P-700000-000

6.3.2Fault Code Description

In case of fault, the fault code can be queried on the fault query interface of turntable control box.

Table 6-7 Description of machine fault codes
（GTHZseries）

Fault code	Fault description	Fault code	Fault description
E01	The upper control box is not connected.	E42	Fence leveling switch failure（lower control）
E02	Platform handle fault	E43	Turret swing switch failure（lower control）
E03	Model setting error	E44	Lower arm variable amplitude switch（lower control）
E05	The BMS communication is fault	E45	Upper arm variable amplitude switch（lower control）
E05	The BMS communication is fault	E46	Expansion arm switch（Lower control）
E07	Bodywork tilt	E47	Arm swing switch（Lower control）
E08	The left drive is not connected	E51	Lower arm variable amplitude switch（Upper control）
E09	The right drive is not connected	E52	Upper arm variable amplitude switch（Upper control）
E10	Handle failure(lower car body)	E53	Expansion arm switch（Upper control）
E12	The median of the handle is faulty(lower car body)	E54	Fence leveling switch failure（Upper control）
E13	The median of the handle is faulty(upper car body)	E55	Walking switch failure（Upper control)
E14	Low battery power	E56	Arm swing switch（Upper control)
E15	Failure of anti-tipping device	E109	Voltage collection fault
E17	Work platform overload	E110	Temperature collection failure
E22	Left walk driver failure	E111	Low SOC 1
E23	Right walk driver failure	E112	Low SOC 2
E24	Pump driver communication failure	E113	Low SOC 3
E25	Pump driver failure	E114	Low total discharge voltage1
E41	Fence swing switch failure（lower control）	E115	Low total discharge voltage2

Fault code	Fault description	Fault code	Fault description
E116	Low total discharge voltage3	E135	Discharge cell under voltage 3(normal temperature)
E117	Low total charging voltage1	E136	Discharge cell undervoltage1(low temperature)
E118	Low total charging voltage 2	E137	Discharge cell under voltage2(low temperature)
E119	Low total charging voltage3	E138	Discharge cell under voltage3(low temperature)
E120	Total charge undervoltage 3	E139	Charging unit under voltage 2
E121	Charge overcurrent 1	E140	Charging unit under voltage 3
E122	Charge overcurrent 2	E141	High charging temperature 2
E123	Charge overcurrent 3	E142	High charging temperature 3
E124	Discharge overcurrent 1	E143	Low charging temperature 1
E125	Discharge overcurrent 2	E144	Low charging temperature 2
E126	Discharge overcurrent 3	E145	Low charging temperature 3
E127	Discharge unit overvoltage1	E146	High discharge temperature 1
E128	Discharge unit overvoltage2	E147	High discharge temperature 2
E129	Discharge unit overvoltage3	E148	High discharge temperature 3
E130	Charging unit overvoltage1	E149	Low discharge temperature 1
E131	Charging unit overvoltage2	E150	Low discharge temperature 2
E132	Charging unit overvoltage3	E151	Low discharge temperature 3
E133	Discharge cell under voltage 1(normal temperature)	E152	Large discharge temperature difference 1
E134	Discharge cell under voltage 2(normal temperature)	E153	Large discharge temperature difference 2

Fault code	Fault description	Fault code	Fault description
E154	Large discharge temperature difference 3	E161	Large charging pressure difference 1
E155	Large charging temperature difference 1	E162	Large charging pressure difference 2
E156	Large charging temperature difference 2	E163	Large charging pressure difference 3
E157	Large charging temperature difference 3	E164	Insulation fault 1
E158	Large discharge voltage difference 1	E165	Insulation fault 2
E159	Large discharge voltage difference 2	E166	Insulation fault 3
E160	Large discharge voltage difference 3		

In case of fault, the fault code can be checked in the fault query interface of the turntable control box

Table 6-8 Description of the drive fault

Fault code	Fault description	Treatment methods and measures
1	IGBT failure	Motor controller needs to be replaced
2	Current sensor zero partial fault	➢ Confirm that the 12V power supply is normal ➢ Replace the motor controller
3	The bus under pressure	Check the high-voltage power supply circuit
4	Hardware over pressure	Replace the motor controller
5	Spinning failure	If the rotation is completely failed and the motor speed is zero, the controller will trigger the blocking limit torque fault
6	Phase current sensor failure	Motor controller needs to be replaced
7	Hardware over current	➢ Check the line ➢ Check the rotation ➢ Check the motor ➢ Replace the motor controller
8	Controller over temperature	➢ If recovered after cooling, treatment is not required ➢ If it still appears after cooling, check the wiring harness and heat sensitivity ➢ Replace the motor controller

Fault code	Fault description	Treatment methods and measures
9	Motor over temperature	➢ If recovered after cooling, treatment is not required. ➢ If it still appears after cooling, check the wiring harness and heat sensitivity. ➢ Replace the motor controller.
10	Software over current	➢ Check the line ➢ Check the rotation ➢ Check the motor ➢ Replace the motor controller
11	Bus over pressure	Check the high-voltage power supply circuit
12	Over speed failure	
13	Block turn fault	➢ If the blocking condition can be restored, there is no need to deal ➢ If the fault is reported in the non-blocking condition, the rotation Angle should be checked first. ➢ In the normal rotation angle, confirm the software version. ➢ Replace the motor controller.
14	Motor temperature sensor fault	➢ If recovered after cooling, treatment is not required. ➢ If it still appears after cooling, check the wiring harness and heat sensitivity. ➢ Replace the motor controller
15	Controller temperature sensor has failed	➢ If recovered after cooling, treatment is not required. ➢ If it still appears after cooling, check the wiring harness and heat sensitivity. ➢ Replace the motor controller.
17	Hardware EEP verification failure	1. Check the start voltage of the solenoid valve 2. Check the solenoid valve 3. Replace the motor 4. Replace the motor controller
20	Driver failure	➢ Check the start voltage of the solenoid valve ➢ Check the solenoid valve ➢ Replace the motor ➢ Replace the motor controller
21	Bus under pressure warning	Check the high-voltage power supply circuit.

Fault code	Fault description	Treatment methods and measures
22	Bus over pressure warning	Check the high-voltage power supply circuit.
23	Controller over temperature warning	
24	Motor over temperature warning	➢ If recovered after cooling, treatment is not required ➢ If it still appears after cooling, check the wiring harness and heat sensitivity ➢ Replace the motor controller
318	Rear left controller vcu communication is lost	➢ Power on again, then continue to observe. ➢ If it cannot be restored, check if other nodes also report abnormalities. ➢ Do not recover, replace the motor controller.
418	Rear right controller vcu communication is lost	➢ Power on again, then continue to observe. ➢ If it cannot be restored, check if other nodes also report abnormalities. ➢ Do not recover, replace the motor controller.
319	The rear left controller did not receive the right rear controller communication signal	➢ Power on again, then continue to observe ➢ If it cannot be restored, check if other nodes also report abnormalities ➢ Do not recover, replace the motor controller.
419	The rear right controller did not receive the rear left controller communication signal	➢ Power on again, then continue to observe ➢ If it cannot be restored, check if other nodes also report abnormalities ➢ Do not recover, replace the motor controller.

6.4 Use and Maintenance of Lead-acid Battery (maintenance required)

6.4.1 Required Equipment

- Protective goggles and gloves
- Rubber handle wrench

- baking soda
- pole protector (i.e. Vaseline, anti-corrosion spray, etc.)
- voltmeter (for liquid rich / wet batteries, colloidal and AGM batteries)
- distilled water and purified water (i.e. water treated by ion, reverse osmosis, etc.)
- discharge tester (if any)
- hydrometer (for liquid rich / wet)

6.4.2 Safety Instructions for Battery Installation

- Always wear protective clothing, gloves and goggles when handling batteries.
- Do not smoke near the battery and keep the battery away from sparks, flames and metal objects.
- When connecting the battery, use a rubber handle wrench.
- Electrolyte is a mixed solution of acid and water, so avoid contact with skin.
- If the acidic solution comes into contact with skin or eyes, rinse immediately with clean water.
- Please check whether the cable connection with the terminal is firm. Too tight or too loose connection may cause pole damage, melting or fire.
- To prevent short circuit, please do not put objects above the battery.
- Wet lead-acid batteries will release a small amount of gas during use, especially during charging, so the battery must be charged in a well ventilated area.

- Do not add acid to the battery.
- Always keep the battery upright. If the battery is placed sideways or obliquely, the liquid in the battery may overflow.

6.4.3 Battery Connection Instructions

Battery cable and torque value:

- the battery cable provides the connection between the battery, the device and the charging system. Soft cables shall be used to connect the battery, charging system and equipment. Improper connection may cause performance degradation and terminal damage, melting or fire.
- The tightening torque of cable fixing nut is as follows:

Nut model	Tightening torque
M8	9~11Nm(80~97ft-lb)
M10	18~23Nm(160~204ft-lb)

- Too tight connection with the terminal may lead to terminal damage, and too loose connection may lead to melting or fire.
- If the terminal is not kept clean and dry, it may be corroded continuously. To prevent corrosion, please apply a thin layer of Vaseline or use terminal protector.

6.4.4 Preventive Maintenance

Inspect

- Check the appearance of the battery. The top, terminal and connection parts of the battery shall be clean, free of dust, corrosion and dry.
- If there is liquid on the top of the battery, it may mean that there is too much water in the battery.
- Check the connection of battery cable and other parts and tighten all loose connections.
- Replace damaged cables.
- Check that all ventilation covers are properly secured to the battery.

Clean

- Clean the top, terminals and connecting parts of the battery with a cloth or brush and the mixture of baking soda and water. Do not let the cleaning solution enter the interior of the battery.
- Wash with water and dry with a cloth, apply a thin layer of Vaseline or use a terminal protector.

- Keep the area around the battery clean and dry.
- Add distilled water
- The battery needs to be added with distilled water regularly. The frequency of adding water depends on the battery usage and operating temperature. Please check the battery frequently to determine the frequency of adding water to the battery. Generally, the longer the battery is used, the more frequently water is added.
- Please fully charge the battery before adding distilled water. If the plate is exposed, please only add distilled water to the discharged or partially charged battery; In this case, distilled water is only added just above the plate, and then charge the battery according to the following steps:
- Before removing the breather cover, please clean it first to prevent the ash layer and debris from entering the battery. Check the electrolyte level, add water when it is higher than the plate, and add distilled water or deionized water when it is lower than the plate.
- For standard batteries, add water to 3 mm (0.12 in) below the exhaust well (referring to the plastic cover in the exhaust hole).
- After adding water, please fix the breathable cover on the battery again.

6.4.5 Charge

Proper charging is a prerequisite for maximizing battery performance. Under charging or over charging may greatly shorten the service life of the battery. Most chargers are automatic and preprogrammed. Some chargers allow the user to set the values of voltage and current. The information about correct charging is as follows:

- The charger of this equipment is automatic and preprogrammed, and there is no need for users to intervene in the charging process.
- The battery should be fully charged after each use.
- Lead acid batteries have no memory effect, so they do not need to be fully discharged before recharging.
- Please check the electrolyte level to ensure that the positive and negative plates are covered by water during charging.
- Before charging, please check whether all ventilation covers are properly fixed on the battery.
- Charge only in a well ventilated area.
- Avoid charging at temperatures above 49 ° C (120 ° f). The following figure shows the state diagram of battery charging process:

6.4.6 Equilibrium

Equalization is the overcharge of a liquid rich / wet battery after it is fully charged. It is recommended to perform equalization only when the specific gravity of the battery is low (less than 1.25) or the specific gravity range is large (greater than 0.030) after the battery is fully charged. Do not equalize other batteries. The following are the conditions for performing equilibrium:

Confirm that the battery is liquid rich / wet.

Check the electrolyte level to ensure that the positive and negative plates are covered by water before charging.

Before charging, make sure that all ventilation covers are properly fixed on the battery.

Set the charger to equalization mode.

The battery will emit gas (bubbling) during the equalization process.

Measure the specific gravity every hour, and stop equalizing charging when the specific gravity is no longer increased.

6.4.7 Storage

Charge the battery before storing it.

Store the battery in a cool, dry place that is not affected by the weather.

Disconnect the power-off plug to eliminate the potential danger of battery leakage.

- The battery will gradually self-discharge during storage. The specific gravity or voltage is monitored every 4-6 weeks.
- The stored battery should be charged once quickly when it is at 70% or lower.
- After the battery is removed from the storage, it should be recharged before use.

  Storage in thermal environment (higher than 32 ° C [90 ° F]): Avoid directly exposing the battery to the thermal environment during storage. The self-discharge speed of the battery in high temperature environment is faster. If the battery is stored in hot summer, monitor the specific gravity or voltage more frequently (about every 2 ~ 4 weeks).

  Storage in a cold environment (below 0 ° C [32 ° F]): Avoid placing the battery in a place where the temperature is expected to reach the freezing point during storage. If it is not fully charged, the battery may freeze at low temperature. If the battery is stored in cold winter, it is important to fully charge the battery.

6.4.8 Troubleshooting

The following battery test steps are only guidelines for determining whether the battery needs to be replaced.

Voltage test during charging

1. Disconnect and reconnect the DC plug to restart the charger.

2. When charging the battery, please record the current during the last half hour of charging (if possible) and measure the voltage of the battery pack.
3. If the current is lower than 5A at the end of charging and the voltage of the battery pack is higher than the following values: 93V for 80V system， 28V for 24V system， 14V for 12V battery， 7V for 6V batteries, proceed to the next step. Otherwise, please check whether the output of the charger is correct and recharge the battery as needed. If the voltage of the battery pack is still Low, the battery may be faulty.
4. When the battery is charged, please measure the voltage of each battery. If the voltage of any battery is lower than the following values, the battery may be faulty:7V for 6V battery, and the voltage difference between the battery and any other battery in the battery pack is greater than 0.5V; 14V for 12V batteries, the voltage difference between the battery and any other battery in the battery pack is greater than 1.0V.

Specific gravity test

1. Fill up the hydrometer and drain it two or three times, and then take a sample from the battery.
2. Measure the specific gravity readings of all battery cells.
3. When the temperature is above 27 ℃ (80 ° f), add 0.004 every 5 ℃ (40 ° f) higher to correct the specific gravity reading; when the temperature is below 27 ℃ (80 ° f), subtract 0.004 every 5 ℃ (40 ° f) lower to correct the specific gravity reading.
4. If each battery cell in the battery pack is lower than 1.250, the battery pack may be under charged, please recharge.
5. If the specific gravity difference between any battery cells in the battery pack exceeds 0.050, please perform equalization for this battery pack.
6. If there are still differences, the battery in the battery pack may be faulty.

Open circuit voltage test (this method is not commonly used)

1. To get an accurate voltage reading, the battery must stop working for at least 6 hours, but preferably up to 24 hours.
2. Measure the voltage of each battery.
3. If the voltage of any battery is 0.3V greater than that of any other battery in the battery pack, equalize the battery pack.
4. Measure the voltage of each battery again.
5. If the voltage of any cell is 0.3V greater than that of any other cell in the battery pack, the cell may be faulty.
6. There are other battery test methods to evaluate battery performance, such as discharge test method, which will not be detailed here.

7. High-frequency battery charger

Relevant technical parameters:

Input voltage: AC100 ~ 240V

Output voltage: 80V

Precautions:

- Input low voltage protection: when the input AC voltage is lower than 85V, the charging protection is closed, and the work will be resumed automatically after the voltage is normal.
- Reverse connection protection: when the battery is reversed, the charger will cut off the connection between the internal circuit and the battery, will not start charging, and will not be damaged.
- Output short circuit protection: in case of accidental short circuit in the charger output, the charger will automatically turn off the output. After troubleshooting, restart the charging with a delay of 10 seconds.
- Charging indication: during charging, the indicator light is yellow, the charging completion indicator light is green.
- Charging braking device: all actions of the machine are cut off during charging.

6.5 Use and Maintenance of Lithium Battery

The use and maintenance requirements of lithium battery are as follows:

Preparation in advance

- Before checking the fault, operators must wear insulating gloves, safety helmets and other necessary safety supplies, and prepare special tools such as multimeter, communication tool (CAN) and computer.
- Check the appearance of the battery system box, such as deformation of the box, rupture of the positive and negative terminal block, loosening of the communication aviation plug, etc.
- Check whether the harness on the communication aviation plug-in socket is misplaced.
- The system is powered on and the battery information is read through CAN communication
- Check and confirm the fault phenomenon and analyze the cause.

Precautions:

- During driving (walking or lifting), if there is no emergency, do not disconnect the key at will and forcibly cut off the main relay of the battery system.
- When the low battery alarm is displayed on the display screen, please charge the battery in time to prevent over discharge of the battery.

- After long-term continuous use of the battery, please charge the battery in time before long-term use to prevent over discharge of the battery caused by self-consumption of the battery system for a long time.
- In case of heating, deformation, liquid leakage, peculiar smell or smoke during the use of the battery, the battery must be stopped immediately and placed in an open place away from the crowd.
- The battery is only suitable for supporting equipment. Do not use the battery in other occasions.
- It is forbidden to use wires to directly short circuit the output port of the battery pack.
- Do not immerse the battery in water, acidic, alkaline or salt solution to avoid rain.
- Do not use or store the battery in corrosive, explosive, high temperature (heating, close to fire source or sun exposure, etc.).
- When charging, please use a special charger and avoid charging in direct sunlight. Do not charge the battery repeatedly after the battery is full. Do not let children touch the charger in charging
- If the battery system is not used for a long time, it should be placed in a suitable environment (the temperature is lower than 40 ℃ , the humidity is less than 90%), the battery power should be maintained at more than 50%, and it should be charged with a special charger at least once every three months.
- Waste batteries may cause danger to people or the environment. Please dispose of batteries according to workplace rules and local regulations.
- Do not apply external force to the battery or make it fall from a height.
- Lithium battery has automatic protection function: if the unit voltage is higher than 3.4V, the battery system is activated for a long time without output current (≤5a) for 12h, BMS will automatically cut off the contactor protection. At this time, it is necessary to charge it to use again.

Chapter 7 Inspection and Maintenance Record Form

Maintenance inspection report					
Product model					
Factory number					
Inspection procedure A					
NO.	**Project**	**YES** The machine is in good condition	**NO** Machine damage or failure	**REPAIRED** The machine has been repaired	**Problem description**
A-1	Check each manual				
A-2	Check each label				
A-3	Check for damaged loose or missing parts				
A-4	Check the hydraulic oil level				
A-5	Check hydraulic oil leakage				
A-6	Function check				
A-7	Check the battery level				
A-8	Perform 30 day maintenance				

Maintenance inspection report					
Inspection procedure B					
NO.	**Project**	**YES** The machine is in good condition	**NO** Machine damage or failure	**REPAIRED** The machine has been repaired	**Problem description**
B-1	Check and replace the hydraulic oil tank return filter element				
B-2	Check the rims and tires and their fasteners				
B-3	Check hydraulic oil				
B-4	Check the angle sensor				
B-5	Check the oil level in the drive reducer				
B-6	Check the connecting bolts of slewing support				
B-7	Periodic lubricate the worm wheel worm reducer				
B-8	Check the cylinder offset				
B-9	Check the wires				
B-10	Check the battery				
B-11	Test travel speed				
B-12	Check the emergency decent function				
B-13	Check the tilt protection system				

Maintenance inspection report					
Inspection procedure C					
NO.	**Project**	**YES** The machine is in good condition	**NO** Machine damage or failure	**REPAIRED** The machine has been repaired	**Problem description**
C-1	Replace the gear oil in the drive reducer.				
C-2	Lubricate the worm wheel and worm gear reducer				
C-3	Change hydraulic oil				
C-4	Replace the hydraulic oil tank suction filter				
C-5	Check the boom slider				
User					
Signature of inspector					
Inspection date					
Inspector post					
Inspector unit					

Explain:

1. The maintenance inspection report shall include a checklist for each type of periodic inspection.
2. Copy the maintenance inspection report for each inspection. The completed form shall be kept for at least 10 years or until the machine is out of use or at the request of the machine owner / company / custodian.
3. Use this form to record the results. After completing each inspection procedure, tick the corresponding box.
4. Record the inspection results. If any inspection result is "no", you must stop using the machine, recheck the machine after maintenance, and tick the mark in the box of "repaired".

Select the appropriate inspection procedure according to the inspection type.

Hangcha Group Co., Ltd

Address: 666 Xiangfu Road ,Qingshanhu Science and Technology City, Hangzhou,Zhejiang.

TEL: +86-571-87938011/+86-571-87938001